CHP Helps Keep Housing Costs Down

MULTIFAMILY HOUSING

Company Name
Toren Condominiums

Location
Brooklyn, NY
(Kings County)

Installation Date
2009

Operating Experience
Beginning 2010

CHP Equipment
Five Tecogen CM-100 and six 1,700 MBH boilers

Generating Capacity
500 kW

Heat Recovery Application
Domestic Hot Water

Type of Fuel
Natural Gas

"Implementing the complex cogeneration system at Toren has been very important to us, and it is one of the buildings many unique features. Its completion is a remarkable feat and a huge step towards reaching our sustainability goals."

- Donald Capoccia, Partner, Toren's Developer

Toren Condominiums

BACKGROUND

Toren Condominiums contains 240 upscale units in a 38-story building in Brooklyn, New York. Toren is a 300,000-square-foot mixed-use building, also housing an art museum and some office space.

It is the first Brooklyn tower to incorporate cogeneration into preconstruction. As such, there is no previous energy use for comparison.

THE APPLICATION

Five 100 kW generators were installed to ensure that the building is using the latest technology and is able to produce all of its own electricity. The installed generators, Tecogen model # CM-100, provide on-site electrical generation allowing the building to be self sufficient. Heat recovered from the production of electricity is used for domestic hot water (DHW), boiler feed preheat and space cooling.

The generators will supply enough electricity to offset 500 kW from Con-Edison, freeing up that power on the grid for other local use. The utility's capacity has been strained due to recent development in the neighborhood resulting in a larger draw.

CHP SYSTEM AND EQUIPMENT

The Toren Condominium CHP plant consists of five Tecogen CM – 100 cogeneration units, capable of a total output of 500kW. The central plant also includes six 1,700 MBH natural gas fired modular hot water boilers to supplement the heat recovery if needed. The heat recovery will be used for temperature control and domestic hot water.

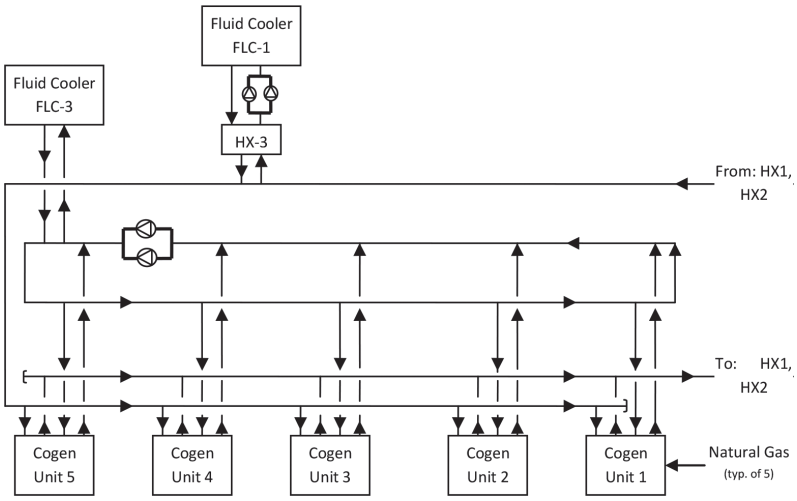

NEW YORK STATE OF OPPORTUNITY. | NYSERDA

ECONOMICS AND ENVIRONMENTAL BENEFITS

It is difficult to determine how much economic benefit Toren has seen as a result of installing CHP technology, since the building has never used another energy source. This is unique because it is one of the first cogeneration systems to be included in pre-construction planning. It is known that the building is using no power off the grid, resulting in more being available for others using the utility. The installation of a cogeneration system has resulted in financial and energy savings and has resulted in leaving behind a significantly smaller carbon footprint than that which would result from more traditional use of resources.

SUMMARY OF BENEFITS

- Reduces carbon footprint.
- Decrease in energy use from the grid.
- Reduction in energy costs.
- Less reliance on utility for energy.

Tecogen CM-100 cogeneration unit

ADDITIONAL RESOURCES

- **Developer/Engineer:** Energy Concepts, nrg-concepts.com
- **Equipment Manufacturer:** Tecogen, tecogen.com/cogen.htm
- **DG Integrated Data System:** chp.nyserda.org