THE NEW YORK STATE ENERGY RESEARCH AND DEVELOPMENT AUTHORITY

RESEARCH AND DEVELOPMENT

RESIDENTIAL HIGH-EFFICIENCY WOOD BOILER WITH THERMAL STORAGE AND SOLAR-THERMAL HOT WATER

HIDLEY FARM CASE STUDY

This installation of the Econoburn two-stage gasification boiler, integrated with thermal storage and a solar-thermal system at Hidley Farm, is an example of maximizing the efficiency of two complementary renewable heating systems. It is the result of the homeowners' desire to use wood harvested from forest stand improvement activities, eliminate boiler operation from Spring through Fall, and minimize combustion-generated air emissions.

BACKGROUND

Hidley Farm is situated on 130 partially-wooded acres in North Greenbush, a town in upstate New York's Capital Region. The original farm house was built circa 1790, and after additions and renovations it is now about 4,000 square feet. During the renovation process, the homeowner implemented many energy saving strategies that included replacing all 50 windows with low-e glass, replacing all doors, adding 18 inches of blown-in cellulose insulation to the attic, installing new exterior sheathing and foam board to the entire house under new heavy-duty vinyl siding, and reducing air leakage with spray in-place foam applied to several areas.

In 2008, a 200,000 Btu/hr Econoburn cord-wood two-stage wood gasification boiler was installed in an outbuilding with wood storage. In 2009, a solar-powered hot-water system was installed. These four, 4-foot-by-8-foot flat plate collector panels provide additional energy to meet space heating and domestic hot water loads. An antifreeze solution is circulated from the heating systems through a buried PEX line-set [1-1/4" lines in foam-filled and wrapped casing] to the home's heating network which includes a 1,250-gallon thermal storage tank in the basement. The water within the storage tank is heated by passing the antifreeze solution through three copper coil heat exchangers. The tank has a nominal operating temperature range of 120-170 degrees Farenheit providing approximately 500,000 Btu of dynamic thermal storage.

nyserda
Energy. Innovation. Solutions.

The heating system also utilizes the old oil boiler as backup and includes an electric water heater to supplement domestic hot water production. The heating and hot water loads are mostly met by the solar thermal and gasification boiler. The wood boiler requires the homeowner's attention to start and refuel it so if the homeowner were to leave for an extended period of time the house would be without heat and run the risk of burst piping and other damage. To prevent this, the oil boiler will kick on when the hot water storage (HWS) drops below 100 degrees F, however, when the oil boiler is firing it will bypass the HWS system as the performance benefits of operating a fossil fuel boiler with HWS are minimal or even detrimental. The electric water heater serves a similar backup role in that it is there primarily for summer operation when the solar output is too low due to a situation such as extended cloudy period or when there is a large hot water demand, for example when hosting several overnight guests. There are substantial performance penalties associated with oil boilers and especially wood boilers operating just to meet a hot water load as this type of load will cause short cycling. It is important to note that reducing the charge of wood to match the hot water load during summer operation and integrating the boiler with HWS significantly reduces these penalties.

PROCESS IMPROVEMENTS/RECOMMENDATIONS

Staged combustion wood boilers, a common design in Europe and now emerging in the United States, are able to obtain far greater thermal efficiency than their single-chamber counterparts, up to 87%. In the first stage of these systems the wood is combusted at relatively low temperatures under oxygen starved conditions in order to off-gas the volatile compounds. These gases are injected into a refractory-lined secondary chamber under oxygen-rich conditions where high temperatures, adequate residence time, and turbulent mixing promote complete combustion.

Integrating these systems with HWS serves to maximize performance. HWS is essentially a large, well-insulated tank that serves as a thermal battery. It allows the boiler to fire in steady-state at any output, regardless of the building's heat load, as it will store any energy not immediately required for later use. This optimizes performance of the boiler due to the nearly steady-state operation and drastic reduction in cycling which allows it to achieve performance levels comparable to oil. The installation of HWS with a wood boiler facilitates the addition of a solar thermal heating system as it is required for both heat sources and can be shared between the two systems.

NYSERDA offers objective information and analysis, innovative programs, technical expertise, and funding to help New Yorkers increase energy efficiency, save money, use renewable energy, and reduce their reliance on fossil fuels. NYSERDA professionals work to protect our environment and create clean-energy jobs. A public benefit corporation, NYSERDA has been developing partnerships to advance innovative energy solutions in New York since 1975.

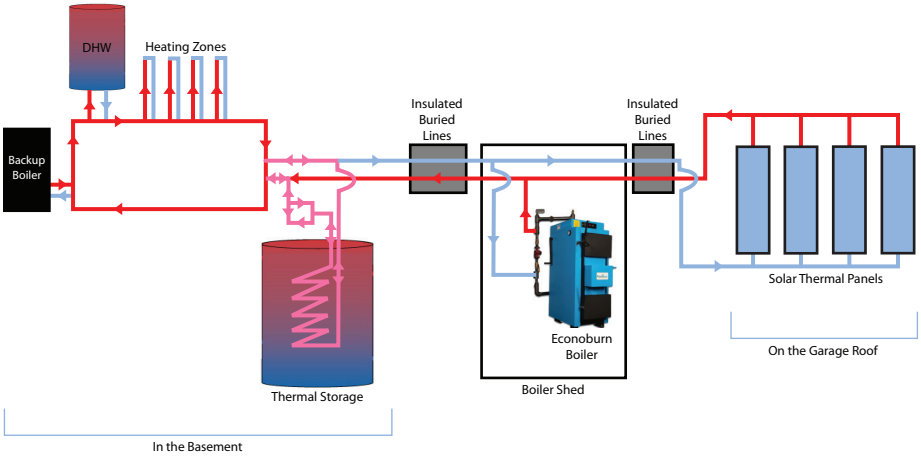

A simplified schematic of the heating system at the Hidley Farm. Note the thermal storage tank has three heat exchange coils and flow direction through these coils is load dependent.

INCENTIVES AND RESULTS

In the first year of operation, all heat demands including domestic hot water were met by combusting about seven full cords of split and properly dried (<20% moisture content) wood. The owner could leave for 1 to 3 days during the winter, and rely entirely on energy drawn from the thermal-storage tank. If the tank was not up to the 170-degree F max, the gasification boiler stayed in operation until the wood was consumed. The homeowner did not have to fire either the wood or oil boiler from April until late September of 2010 due to the addition of the solar thermal system. The HWS temperature was in the range of 110-130 degrees F from the solar panels alone throughout the Spring and Summer of 2010. Data has not been fully collected regarding electricity use associated with the electric water heater. It is also important to ensure the energy saving measures implemented by the homeowner are not trivialized, without them there is no doubt that the heating system would have operated more often.

When the various sub-systems were installed, there were no tax incentives for this sort of project. However, there were tax incentives for both solar thermal panels and associated thermal storage systems. If one is going to install a high efficiency wood boiler system with thermal storage, it makes both operational and tax advantage sense to also install a shared thermal solar system. The available tax credits for solar thermal components are a 30% Federal and 20% NYS tax credit on the full cost.

For more information visit us at www.nyserda.org/programs/Research_Development

call us at 1.866.NYSERDA

or e-mail us at nar@nyserda.org

Photographs courtesy of Dick Gibbs.

RDREN-cs-hf
12/10

nyserda
Energy. Innovation. Solutions.