CHP Serves College, Hospital and Nursing Home

EDUCATIONAL & HEALTH FACILITIES

Company Name
Burrstone Energy Center

Location
Utica College
(Utica, NY)

Installation Date
July 2009

Operating Experience
2 years (as of July 2011)

CHP Equipment
Two, 1100 kW Engine-Generators, part of a 4 Engine-Generator set for the whole campus (3634 kW total capacity)

Generating Capacity
1100 kW

Heat Recovery Application
Domestic Hot Water (DHW)

Design CHP Efficiency
60-80%

Type of Fuel
Natural Gas

Annual Utility Savings
$550,000 per year
(estimated for entire campus)

Simple Payback:
20 years (estimated for full campus project)

"Utica College and FSLH share a deep commitment to the needs of this generation and future generations. We are pleased to partner with our good neighbor in this endeavor that will lessen our carbon footprint, promote smarter technologies and practices, and ultimately conserve precious resources for both facilities."

- Todd S. Hutton,
President Utica College

BACKGROUND

Utica College is located in Utica, NY. Burrstone Energy coupled with Faxton-St. Luke's Healthcare (FSLH) and Utica College to create an energy center to serve the needs of both, using engine-generators to produce needed electricity and the recovered heat for domestic hot water applications. The project supplies 75% of the power used at Utica College.

Burrstone Energy Center, Utica, NY

THE APPLICATION

The full facility is made up of four engines that will run on natural gas. Those engines are between 60 and 80 percent efficient. The excess heat produced by the engines will then be captured and either transported to the hospital for use or used to make steam for the hospital. The Engine-Generators replaced the two boilers that the hospital had been using; those boilers are now shut down more than 80% of the time. The hospital also installed a new air conditioning system that runs off of steam and heat, to take advantage of the new cogeneration plant and save more money. The engine-generators are natural gas fueled. Electricity produced in parallel with the grid though the generators can be isolated and supplement the output of the site's emergency generator in case of a utility outage. This allows the hospital and college to serve as shelters during times of power outages from natural or manmade events.

CHP SYSTEM AND EQUIPMENT

One 1100 kW engine serves the college, two 1100 kW units serve the hospital, and a 334 kW engine serves the nursing home. All four engines are located in a new facility near the hospital's boiler house. Each engine includes a heat recovery steam generator (HRSG) as well as heat exchangers to transfer heat from the engine jacket water to meet hot water demands in the hospital. Dump radiators reject excess heat when the return water temperature entering the engine is too high. Heat is a byproduct of engine-generators and is recovered from each engine as hot water that can be used for spacing heating or circulated through an absorption machine to produce chilled water for air conditioning depending on seasonal requirements.

NEW YORK STATE OF OPPORTUNITY. | NYSERDA

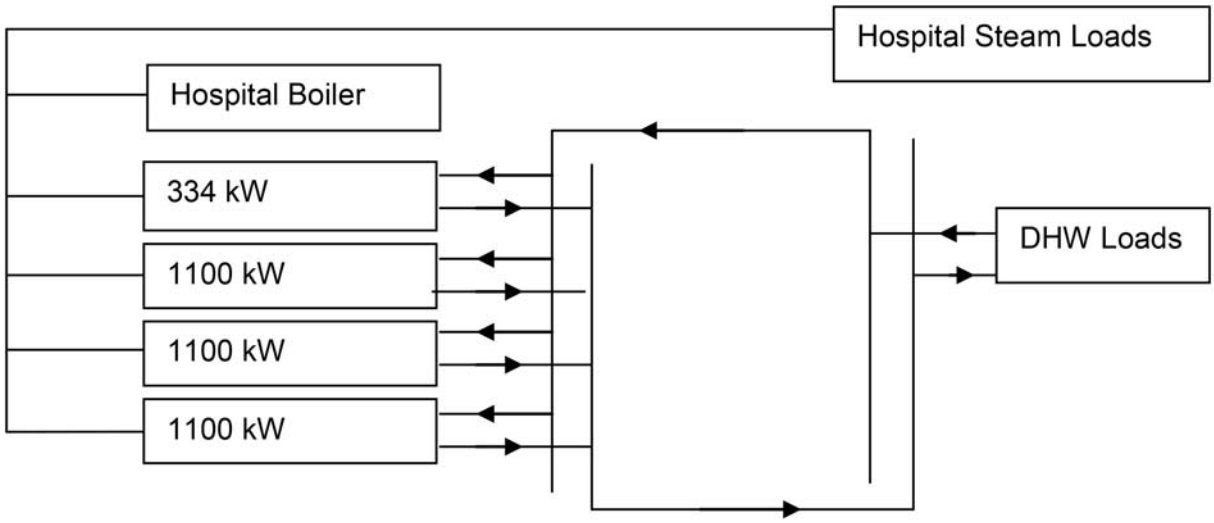

ECONOMICS AND ENVIRONMENTAL BENEFITS

The full system for FSLH and Utica College was completed on a turnkey basis at a cost of $13 million. Net savings should exceed $500,000 annually and yield simple payback within twenty years. Cogeneration will reduce greenhouse gas emissions by an estimated 4,000 tons per year, provide more reliable services for hospital patients and college students, and reduce the demand on the local utility. With this increased power stability and reliability, FSLH and Utica College expect to save hundreds of thousands of dollars per year. Limited data from the site are available in an hourly format on NYSERDA's DG/CHP website from July 2009.

SUMMARY OF BENEFITS

- CHP system provides majority of required energy.
- Significantly reduced carbon footprint.
- Synchronous generators allow operation independent of utility grid in emergencies.

ADDITIONAL RESOURCES

- **Developer/Engineer:** cogenpowertechnologies.net
- **DG Integrated Data System:** chp.nyserda.org