SUSTAINABLE ENERGY RESOURCES FOR CONSUMERS GRANT

Part of the Weatherization Assistance Program at

Cattaraugus Community Action

WHAT IS SERC?

- SERC was a grant program designed to bring renewable energy to WAP eligible homes.
- The premise of the program was to educate the community about the viability of renewables in all levels of the residential market.
- SERC was also designed to address the gap in employment for highly skilled labor in a niche market.

What does this have to do with Community Action?

•We are helping low-income families become more self-sufficient by alleviating household energy burden during a period of rising energy costs.

•We are improving the quality of the living conditions of the families served by ensuring the safety of utility equipment.

•Low-Income families are taking ownership of these technologies by educating friends and neighbors.

•We are creating partnerships between training providers for systems and interested employment providers.

•As a weatherization provider, we deliver solid field data for advancement in weatherization

Technologies

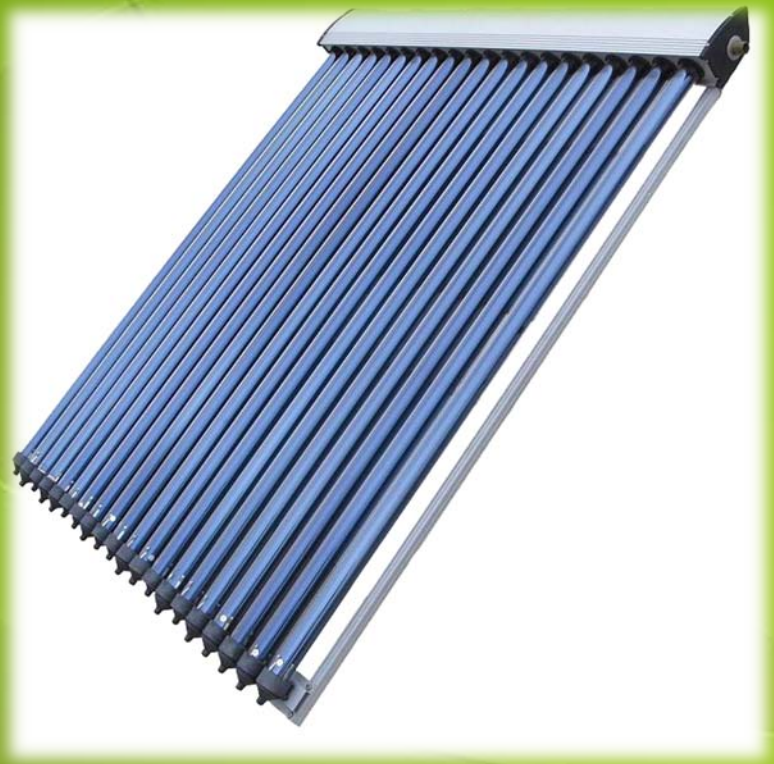

Solar Thermal Water Heaters

Solar Photovoltaic Electric

Tech. Cont.

Solar Thermal Water Heating

- Designed to alleviate 70-80% of domestic hot water usage.
- Systems come in 20 and 30 tube arrays and can be arranged to fit any household size.
- Major components include collector, pump station, storage tank, and transfer lines.

Solar Photovoltaics

- Designed to address a minimum of 20% of electric base-load of home.
- Systems are sized according to the inverter size; 3kw, 4kw, and 5kw.
- All systems are grid-tied with no battery backup, they are inspected and interconnection paperwork filed to complete net meter install by utility.

Used with Homeowner Permission

Which Tech To Use?

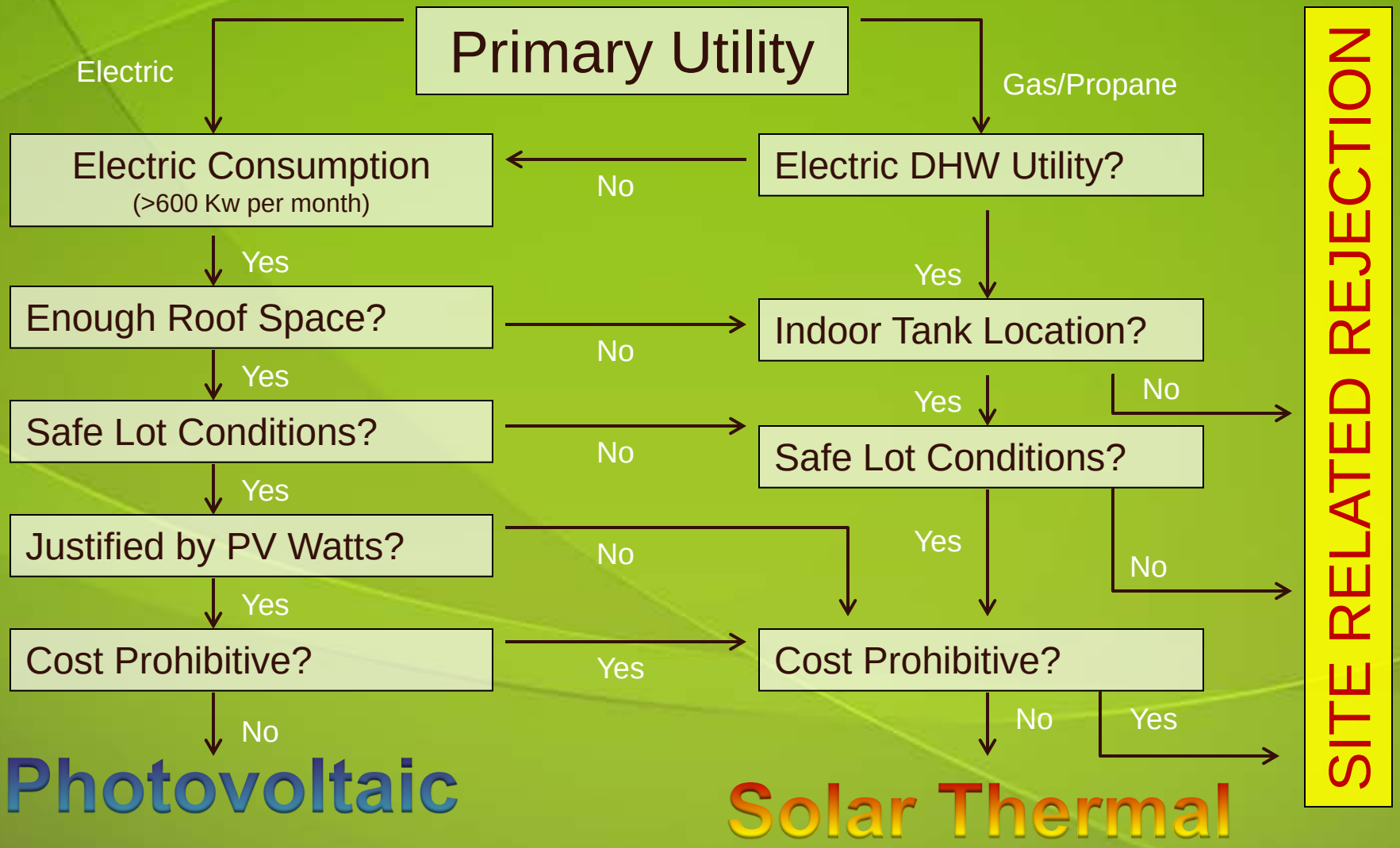

Closed Loop, Freeze-Protection System

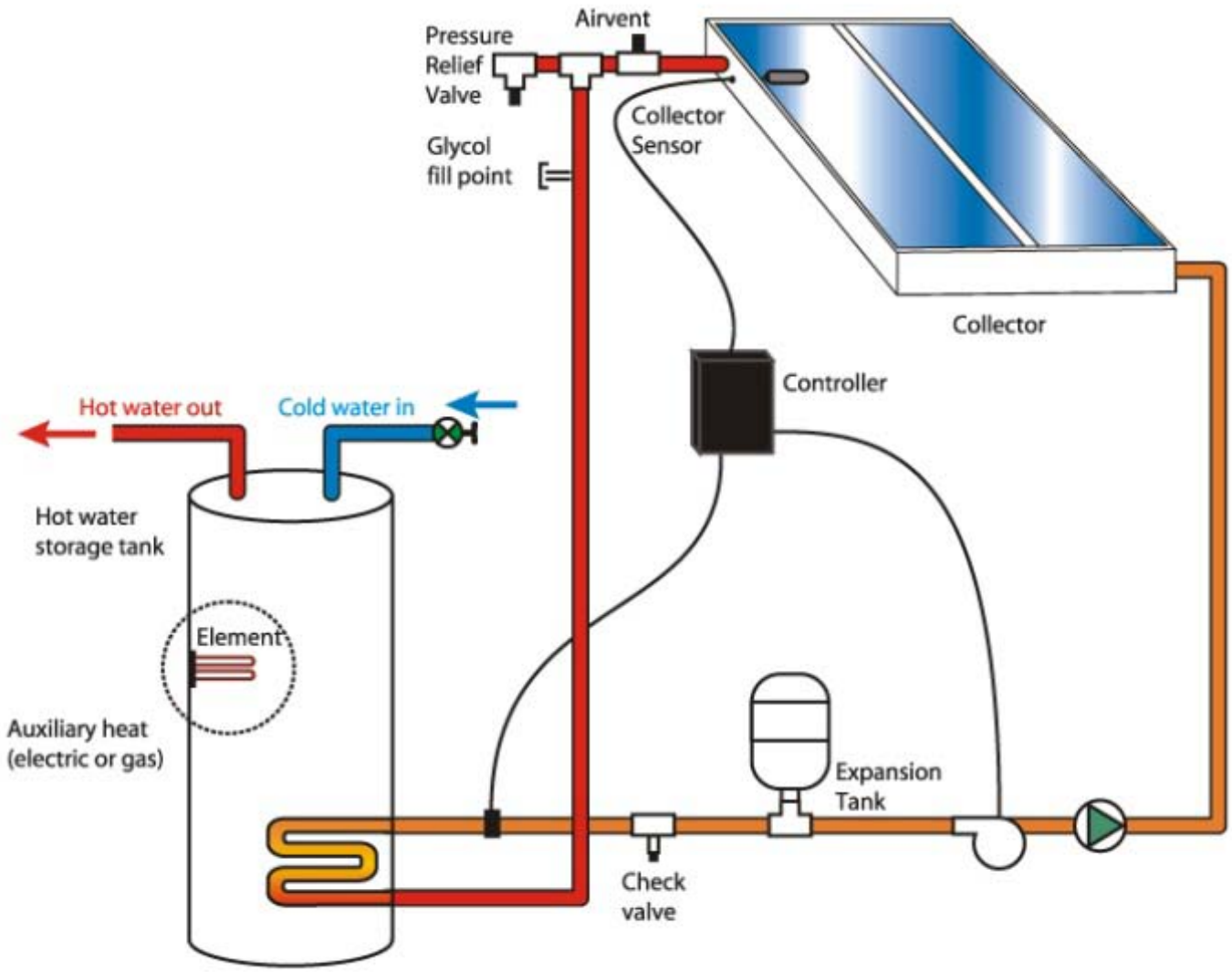

Solar Thermal Cutaway

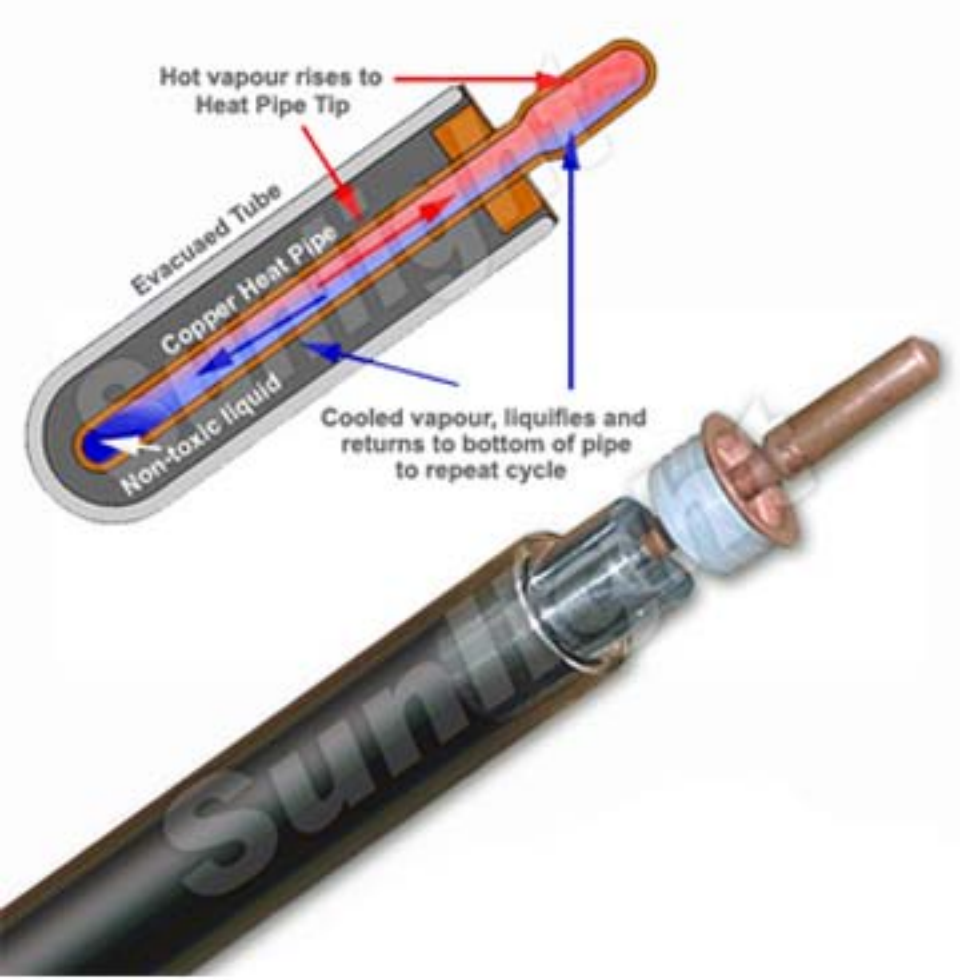

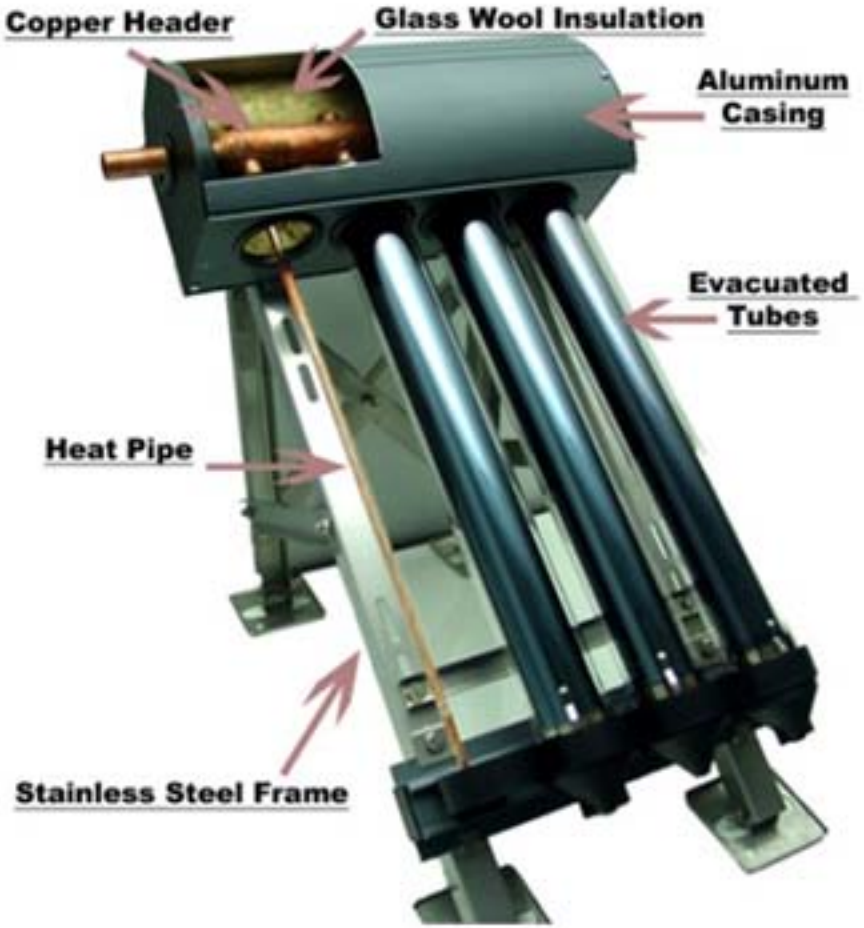

Basics of Solar Photovoltaics

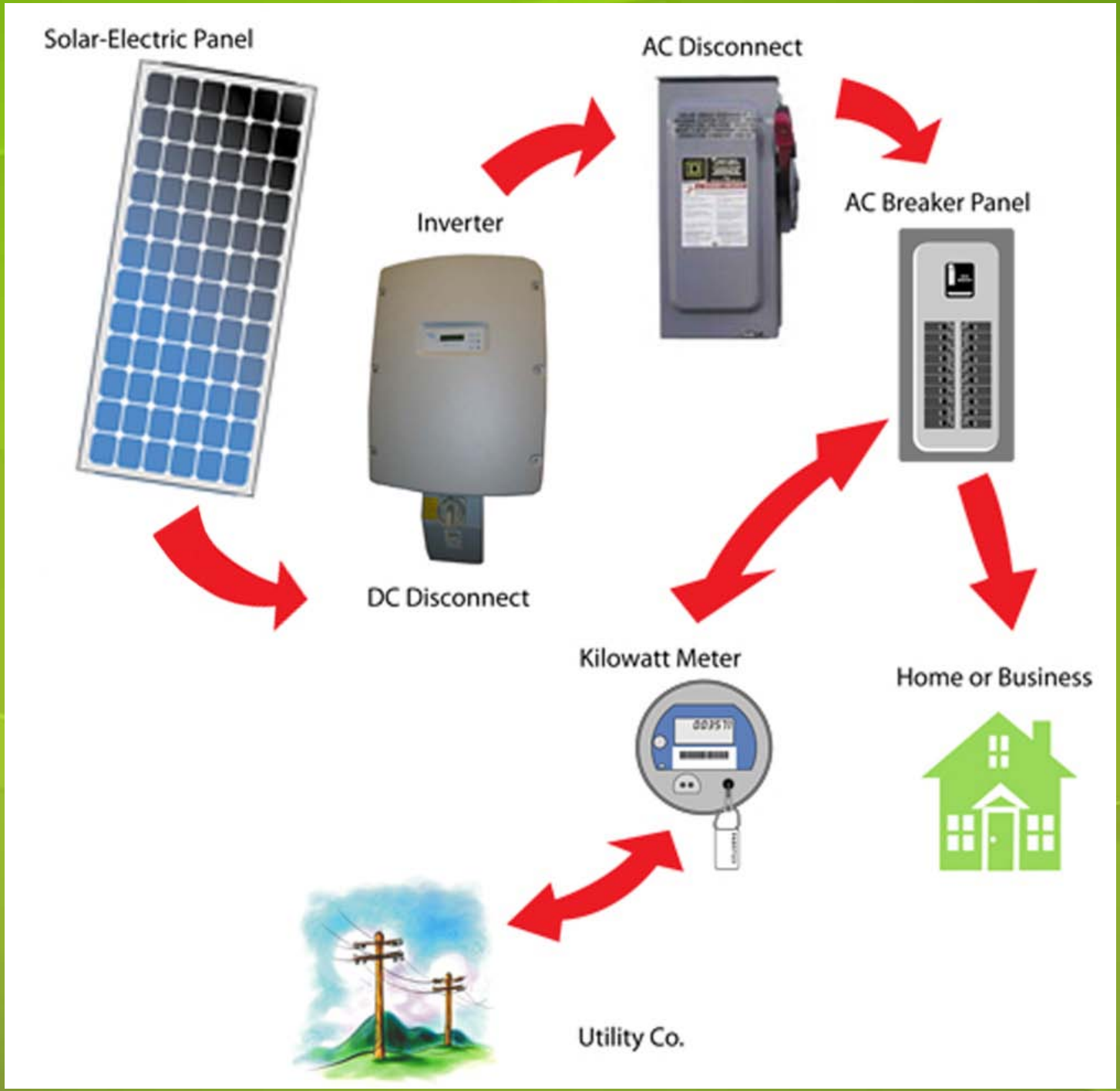

Additional Measures as part of the Grant

Small Wind Generators

- Small residential and vertical axis wind turbines are being considered in sites that have a higher-than-average wind speed and can provide an adequate test site for future considerations.

Geothermal Heating

- SERC acknowledges geothermal as a renewable energy source for consumers. We are also searching for a few locations to subcontract for geothermal heating systems to be installed and monitored.

Get the Six Questions Out!

- Who is doing the installations?
- What has the effect been on weatherization and communities?
- Where are the systems installed?
- When is the grant scheduled to expire?
- Why now? Why low-income? Why these systems?
- How can the program be replicated? Are there any differences in protocol from Wx?

METHOD TO THE MADNESS

1. Identify resources both in house and abroad.
2. Procurement process of suppliers and contractors.
3. Identify the client base (weatherization, ads).
4. Schedule meeting with clients for site evaluations.
5. Monitor work in progress (stuff WILL come up).
6. Final inspection and client education.
7. Schedule inspection and complete interconnection.
8. Follow-up with the client and begin utility tracking.
9. Rinse and repeat from Part 4 on. Evaluate Success!

Costs of Installation

Standard 3Kw Solar PV

- Materials $10540
- Labor $ 2240
- Total $12780

Market Comparison with rebates

- NYSERDA (25%) -$3195
- Fed. Tax Credit (30%) -$3834
- New Total $5751

Renewable Energy Credit Deduction

- $250 per Rec (x3) -$750/yr
  (After 3 yr NYSERA Period)

Electrical Savings Estimate

- 4320 Kwh/Yr.
  @ $.16 KwH -$519

Return On Investment Period:

4.5 yrs

30 Tube Thermal Collector

- Materials $ 4048
- Labor $ 2240
- Total $ 6288

Market Comparison with rebates

- NYSERDA (15%) -$943
- Fed. Tax Credit (30%) -$1886
- New Total $3459

Savings Estimate (Utility Equivalent)

- 7164 MBtu/Yr.
  @ $.14 MMBTU (gas)-$1002
  @ $.44 MMBTU (ele.)-$3152

Return On Investment Period:

3.4 yrs Gas

1.1yrs Elect.

CALCULATION VARIABLES

Solar Photovoltaics

- All production estimates were based on 4 hours of usable sunlight per day, at an angle of 18 degrees (4/12 pitch) with minimum electric resistance
- NYSERDA retains the rights to the REC's for 3 years if the homeowner uses the incentive program. A private brokerage needs to be used to track and disburse REC's and payments.

Solar Thermal

- All production estimates were based an average daily BTU production of 19,900 per 30 tube panel. SIR's drop dramatically with each panel.
- Required system dump-stations remove some heat from the system as a safety feature. That heat can be used as unintentionally conditioned space heating in a basement or crawlspace.

Results –The Good

- 3 KW systems reported a monthly savings between $70-$120 per month.
- 4KW systems reported a monthly savings of $80-$160 per month (2 systems)
- Survived a hail storm (golf ball size)
- One homeowner is owed $180 from National Grid (budget plan)
- Solar PV systems required little to no call backs for maintenance or customer issues.

Results –The Bad

- Some solar thermal systems required callbacks for failed components
  - Substandard pumpstations and controllers
  - Failed fittings
- Difficult to quantify solar thermal effect on utility bills
- Every application is different. There is no such thing as a “cookie cutter” system.

The Ugly

THANKS FOR YOUR TIME AND ATTENTION ☺