AAMA
American Automobile
7430 Second Avenue, Suite 300 • Detroit, Michigan 48202

FUEL ETHANOL COMPATIBILITY STANDARDS and DISPENSING EQUIPMENT LIST FOR E_d85 FUELED VEHICLES

August 10, 1995

AAMA

American Automobile Manufacturers Association
7430 Second Avenue, Suite 300 • Detroit. Michigan 48202

FUEL ETHANOL COMPATIBILITY STANDARDS and DISPENSING EQUIPMENT LIST FOR E.85 FUELED VEHICLES

1. Purpose:

Fuel Ethanol is easily contaminated during blending, transportation, storage and dispensing. These standards and equipment lists are intended to assure that E_d85 fuel dispensed to vehicles will be suitable for performance and durability of the vehicles.

2. Background:

Fleet testing experience with dedicated E_d85 as well as Flexible Fuel Vehicles (FFV's) in the past few years has shown that vehicle fuel system reliability often has not met customer expectations. E_d85 fuel contamination has been the major cause. [1,2] Conmbuting to the E_d85 fuel contamination concern are several interrelated factors:

- Vehicle fuel filter clogging is detected weeks or months after site installation/service.
- Some "E_d85 service" dispenser parts decompose or corrode into the fuel.
- No standard exists for "E_d85 Compatibility" of dispenser systems or components.
- No authoritative source exists for "Approved" equipment to dispense E_d85.
- UL not address all aspects of "E_d85 Compatibility".
- Site installation practices affect the quality of the fuel.
- Fuel purity levels are assumed (seldom tested) after gasoline and E100 are produced.
- No nationwide requirement exists to test new sites for post-blending fuel contamination.
- Fuel analysis results vary with the volume of fuel purged from the dispenser.
- Automobile manufacturers have issued different specifications for E_d85.
- ASTM, C.A.R.B., EPA and other entities have different standards for E_d85.

These issues were discussed with respect to the chemically similar M85 fuel among representatives from the automotive industry, fuel providers, equipment suppliers and regulatory agencies at the Staff Workshop on Methanol Fuel Equipment Compatibility, December 14, 1993[3] in Sacramento, California sponsored by the California Energy Commission. Outcomes of the session included a call for industry-wide commercial specifications and test methods for E_d85 and the publishing of an equipment list using an agreed upon new definition of compatibility. (See *Specifications for Fuel Ethanol (E_d85) as Dispensed to Vehicles*, AAMA, May, 1995.[4])

3. SCOW:

This document provides a concensus for commercial E_d85 dispensing equipment that will enable reliable vehicle fuel system performance. A definition for "E_d85 Compatibility" is provided, as well as a mechanism to list dispenser equipment, systems and complete site types as "E_d85 Compatible". A "grandfather clause" is included for the designation of field-proven equipment and sites as "E_d85 Temporary Use". Equipment lists are included to guide in the specification and evaluation of E_d85 sites. Both vapor recovery and non-vapor recovery systems are covered. Future plans are to add sections on transportation, site installation and maintenance practices and a listing of "E_d85 Compatible" equipment as this information becomes available.

M A

American Automobile Manufacturers Association
7430 Second Avenue, Suite 300 • Detroit, Michigan 48202

FUEL ETHANOL COMPATIBILITY STANDARDS and DISPENSING EQUIPMENT LIST FOR E_d85 FUELED VEHICLES

4. Definitions;

The demonstration of "E_d85 Compatibility" is the responsibility of the site contractors and equipment suppliers and is not implied by this listing. Although these and other equipment suppliers may have developed and *catalogued* parts which are equally suitable, claims of "E_d85 Compatibility" are easily made and not often supportable. This is often true simply because of a lack of recognition of a standard definition for the term. For satisfactory performance and durability of FFV's, the term "E_d85 COMPATIBLE" as it applies to E_d85 dispensing sites and the materials selected for use in and with that equipment is defined as follows:

> "E_d85 COMPATIBLE" means not only no deterioration in the equipment, but also no deterioration in the fuel quality. All components which come into contact with the fuel shall be verified by *soak* testing.[5] The conductivity, chemical stability and filter plugging tendencies (particulates and unwashed *gum* for example) of the *soak* test fuel shall be tested before and *after soak* testing the equipment and its constituent materials. *Soak* test fuels shall be chosen per *SAE* Standard J1681 (e.g., CE25A).[6]. Pending SAE Standards J1747 and J1748 proscribe test methods for materials and metals in methanol fuel blends. In addition, to be "E_d85 COMPATIBLE", a dispensing site shall be constructed to avoid the coupling of dissimilar metals in contact with the fuel. Dissimilar metals are those which are separated widely on the galvanic series.

To provide for the fact that many E_d85 dispensing sites have been in service without "E_d85 Compatible" equipment by the above definition, but have provided a modicum of vehicle reliability, the term "E_d85 TEMPORARY USE" is defined as follows:

> "E_d85 TEMPORARY USE" designation shall be applied by AAMA to such equipment or dispensing site that, although not tested rigorously to the "E_d85 COMPATIBLE" standard, has nonetheless been in service dispensing E_d85 for more than a year with a modicum of E_d85 vehicle fuel system reliability.

****

To obtain "E_d85 COMPATIBLE" or "E_d85 TEMPORARY USE' designation, equipment suppliers and dispensing site contractors should submit assembly drawings, materials list, and test data to the AAMA to the attention of Jim Steiger at 7430 Second Avenue, Suite 300 Detroit, MI 48202 (313) 872-4311 and to the California Energy Comission (CEC) to the attention of Alan Argentine at 1516 Ninth St. Sacramento, CA 95814 (916) 654-4689. Products receiving either designation will be listed in future editions of this document and transmitted to DOE, COFA, AMI, and PEI for inclusion in their publications as well. The SAE is developing a standard labelling system for "E_d85 COMPATIBLE" components .

****

AAMA

American Automobile
7430 Second Avenue. Suite 300 • Detroit, Michigan 48202

FUEL ETHANOL COMPATIBILITY STANDARDS and DISPENSING EQUIPMENT LIST FOR E_d85 FUELED VEHICLES

5. Caveats:

It should be cautioned that UL listing is NOT sufficient to document "E_d85 Compatibility" because Underwriters' Lab performs only those tests that the equipment manufacturer prescribes. Generally this does not include fuel contamination after soaking. Because E_d85 sites may from time to time see much lower concentrations of Ethanol, and since it is desirable to be able to convert stations to other fuels, and because many elastomers and plastics respond unfavorably to gasoline/alcohol blends[7] containing ethers, the elastomers and plastics should be tested on SAE [8] modified by diluting the Reference Fuel C with 15% MTBE.

Consideration should be given to additional steps that may be necessary to avoid contaminating the fuel with the listed hose product at sites which may have low throughput. Such measures may include placement of an E_d85 COMPATIBLE filter at the nozzle end of the hose, periodic recirculation of fuel back into the storage tank (where it will be filtered again at the dispenser), etc.

The following equipment listings are modelled after dispensing stations that have performed satisfactorily and supplied the FFV fleets with the highest degree of reliability thus far. The listing designates the components and assemblies as "E_d85 TEMPORARY USE" as they have not been confirmed to date as passing the test for "E_d85 COMPATIBILITY".

Installation practices for dispensing sites (not covered) should also be proven not to degrade the fuel; ie. pipe joining and sealing compounds, or dissimilar metals in mating parts joined in manufacturing or on site.

AAMA

American Automobile Manufacturers Association
7430 Second Avenue, Suite 300 • Detroit, Michigan 48202

FUEL ETHANOL COMPATIBILITY STANDARDS and DISPENSING EQUIPMENT LIST FOR E_d85 FUELED VEHICLES

References:

1. Weins, J., California Energy Commission, Cox, E. F., Ford Motor Co., Fanick, E. R., and Smith, L. R., Southwest Research Institute, Methanol Fuel Formulation Issues, Nov., 1993

2. Brinkman, N., Halsall, R., Jorgensen, S., Kirwan, J., General Motors Corporation, SAE Paper # 940764: The Development of Improved Fuel Specifications for Methanol (M85) and Ethanol (E_d85), February, 1994

3. Deller, N. J., California Energy Commission, Summary of Staff Workshop on Methanol... Equipment Compatibility..., December 13 and 14, 1993 – Sacramento, California

4. American Automobile Manufacturers' Association (*AAMA*), Specifications for Fuel Ethanol (E_d85) as Dispensed to Vehicles, May, 1995

5. SAE Standard J1747, "Recommended Methods for Conducting Corrosion Tests in Gasoline/Methanol Fuel Mixtures", June, 1992

6. SAE Standard J1681, "Gasoline/Methanol Mixtures for Materials Testing", Sept., 1990

7. Cox, E.F. and Greenfield, N.W., Ford Motor Company, Materials and Methods of Handling Fuel for Reliable FFV Operation. A Presentation for the Coordinating Research Council, September 21 and 22, 1992 – San Diego, California

8. SAE Standard J1748, "Recommended Methods for Determining Physical Properties of Polymeric Materials Exposed to Gasoline/Methanol Fuel Mixtures", Oct., 1993,

AAMA
American Automobile Menufacturers Association
7430 Second Avenue, Suite 300 • Detroit, Michigan 48202

ABOVE GROUND
E_d85 DISPENSING
STATION

AAMA
American Automobile Manufacturers Association
7430 Second Avenue, Suite 300 • Detroit, Michigan 48202

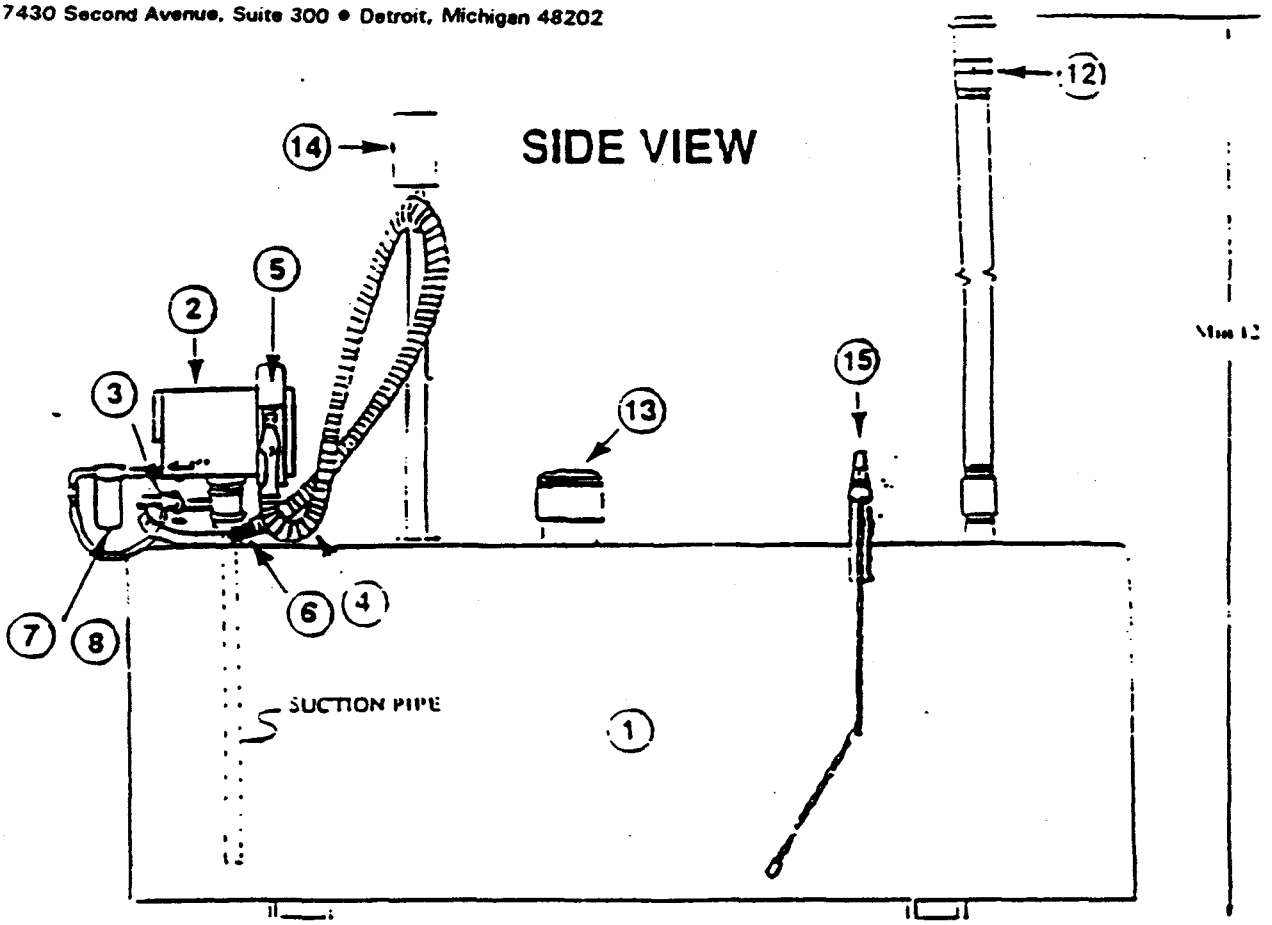

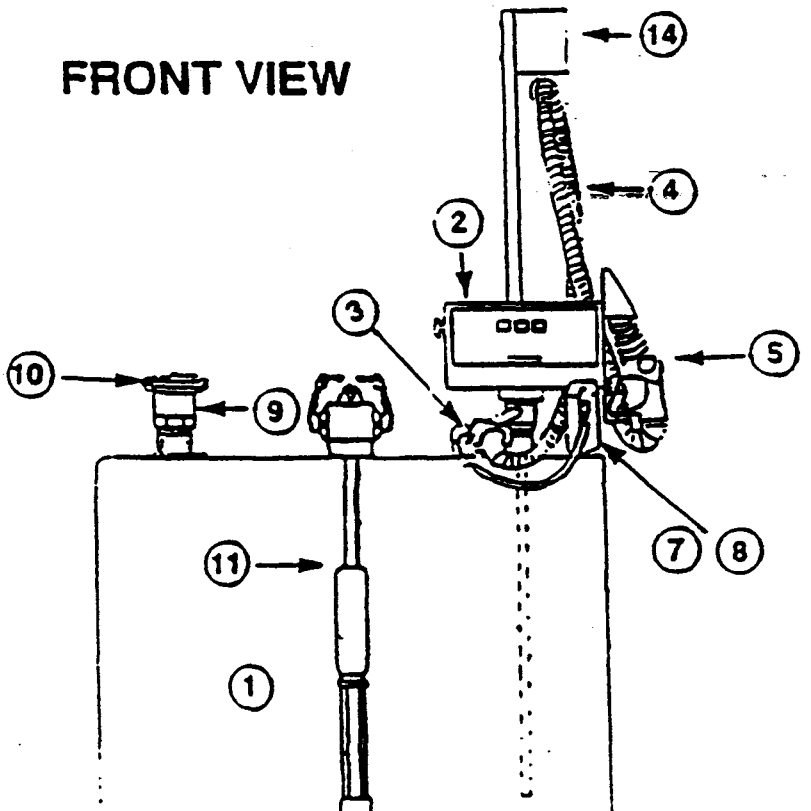

(14) Hose Retractor: (Memo only, does not contact fuel)
Overhead hose retractor for 3/4" X 12' hose, swivel and nozzle

(15) Level Gauge:
Morrison part no. 1818 or 1918

AAMA
American Automobile Manufacturers Association
7430 Second Avenue. Suite 300 • Detroit, Michigan 48202

UNDERGROUND
E_d85 DISPENSING
STATION

AAMA
American Automobile Manufacturers Association
7430 Second Avenue, Suite 300 • Detroit, Michigan 48202

Ed85 Dispenser

Stage II Vapor Recovery system with Submersible Pump

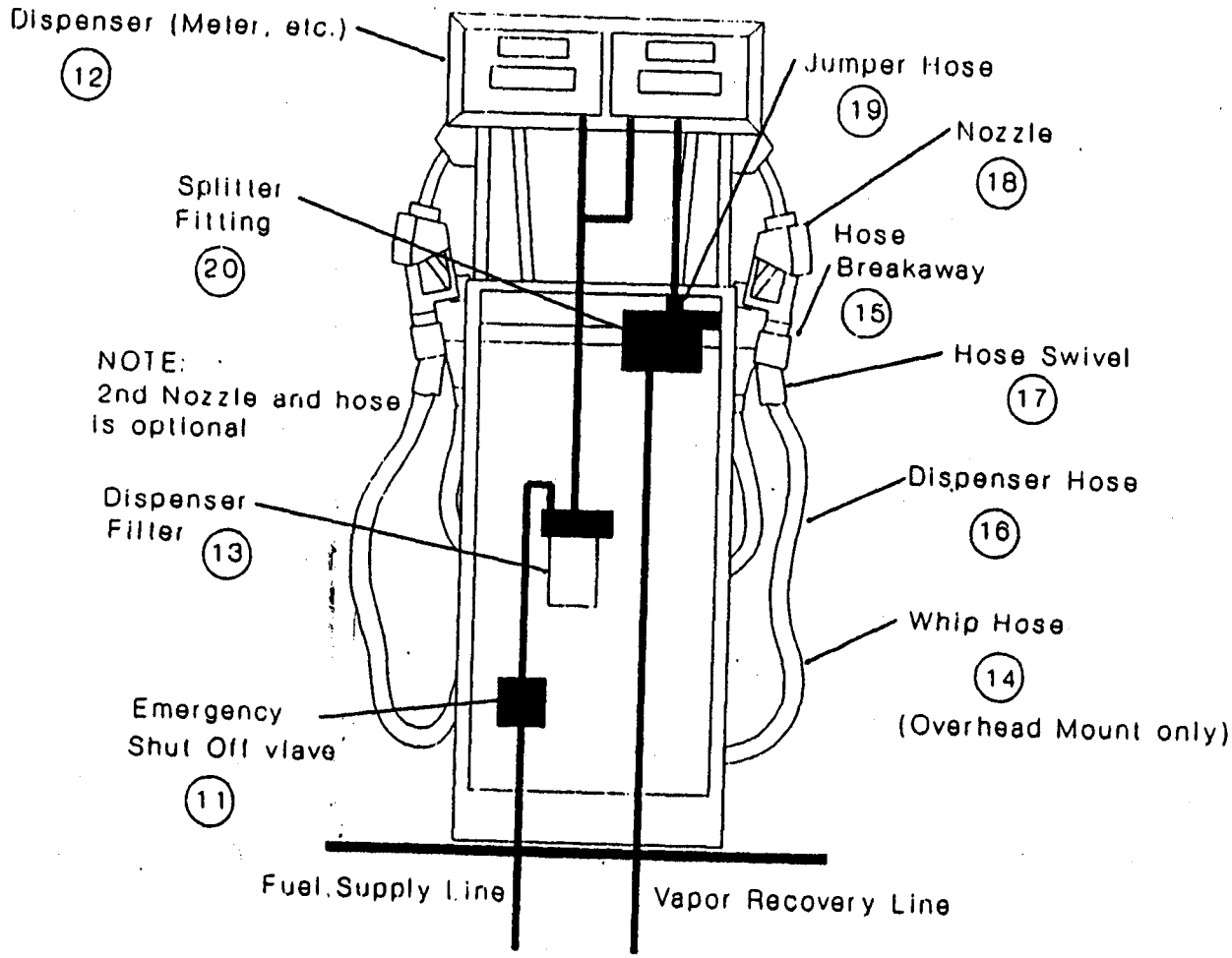

AAMA
American Automobile Maunfacturers Association
7430 Second Avenue, Suite 300 • Detroit, Michigan 48202

Ed85 Dispensing Station

with Underground Tank

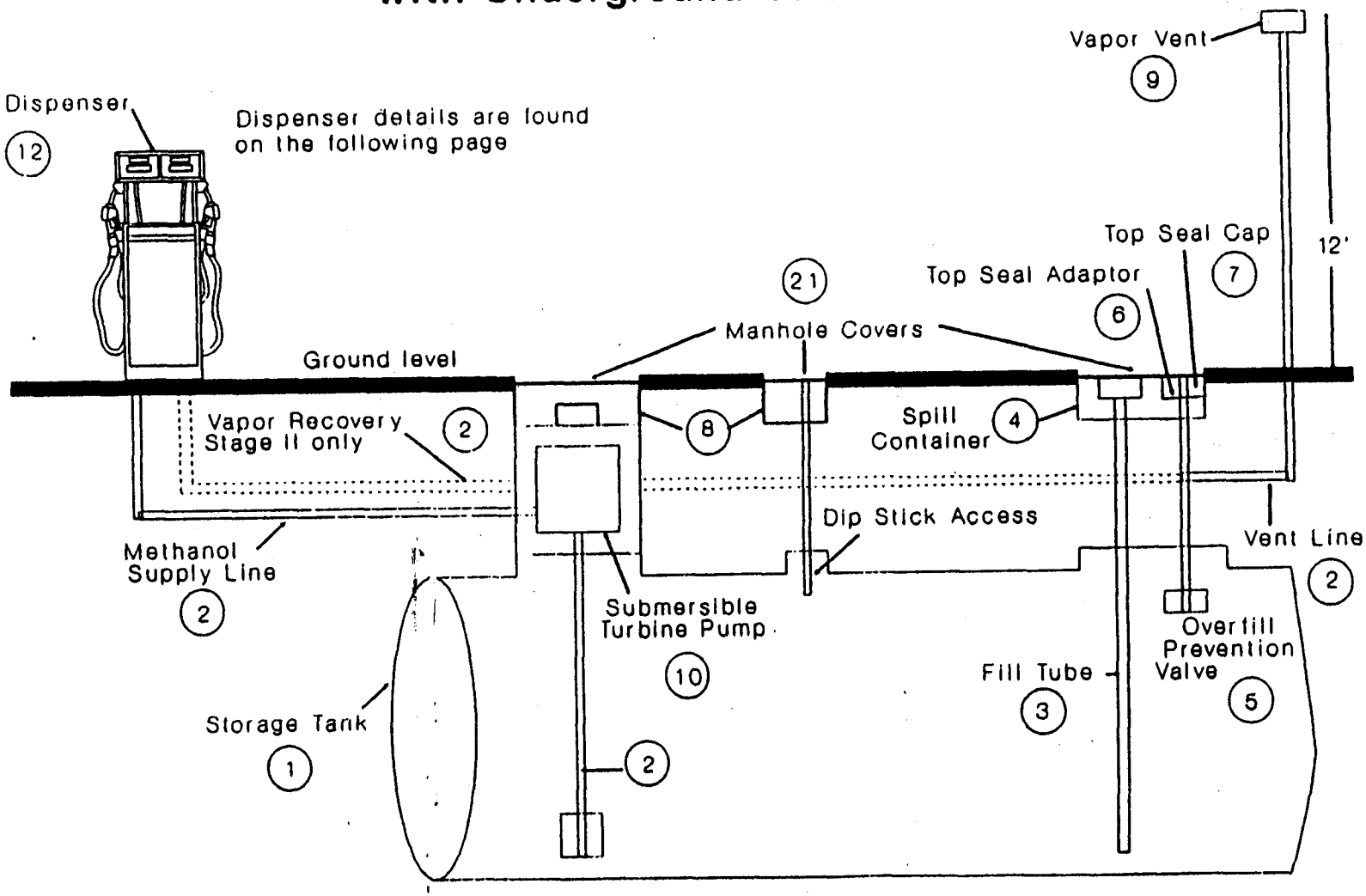

AAMA

American Automobile Manufacturers Association
7430 Second Avenue. Suite 300 • Detroit. Michigan 48202

Recommended Part List for E_d85 Dispensing Stations with underground tanks:
These components are designated as "E_d85 Temporary Use" until "E_d85 Compatibility" has been demonstrated to AAMA and CEC.

General Features:

M85 Underground Tank
Stage I Vapor Recovery
With and without Stage II Vapor Recovery
Submersible pump

(1) Tank Construction:

Double wall
Low carbon cold finish steel
Butt welded and ground smooth

(2) Piping:

Primary piping: Schedule 40 black iron pipe welded in place.
Ifneeded, Secondary piping : Total Containment brand. It is made of polyethylene with clamp seals which use flat gaskets.
Optional: Ameron or AO Smith Red Thread II primary and/or secondary special fiberglass tubing.

(3) Fill Adaptor:

OPW 633T-8076 adapter made of bronze

(4) Spill Container,

FairField Industries SCM-5 4" diameter Stainless Steel threaded onto the fill pipe.

(5) Overfill prevention valve ass'y:

Use OPW 61SOM-4121 valve, modified to include anodizing of at least .002" thickness and methanol compatible float. Float must retain 90-100% of original density and integrity after soaking in E_d85. (61SOCM-C412 California Only).
Optional: use OPW 53VML "Modified for Methanol Use."
Note: Fill tube must be cut to length prior to anodizing.

(6) Vapor Recovery Adapter:

OPW 1611AVB-1610 adapter made of bronze

(7) Top Seal Cap:

OPW 634TT-7085

(8) Tank Manholes:

10" black iron pipe with flange for cleanout.