SRI/USEPA-GHG-VR-43
September 2007

Environmental Technology Verification Report

Electric Power and Heat Production Using Renewable Biogas at Patterson Farms

Prepared by:

Greenhouse Gas Technology Center

Operated by
Southern Research Institute

Under a Cooperative Agreement With
U.S. Environmental Protection Agency

and

Under Agreement With
New York State Energy Research and Development Authority

EPA REVIEW NOTICE

This report has been peer and administratively reviewed by the U.S. Environmental Protection Agency, and approved for publication. Mention of trade names or commercial products does not constitute endorsement or recommendation for use.

THE ENVIRONMENTAL TECHNOLOGY VERIFICATION PROGRAM

U.S. Environmental Protection Agency

ETV Joint Verification Statement

TECHNOLOGY TYPE:	Electric Power and Heat Production using Renewable Biogas
APPLICATION:	Combined Heat and Power System
TECHNOLOGY NAME:	CAT 379 engine/generator set with integrated Martin Machinery CHP system
COMPANY:	Patterson Farm
ADDRESS:	1131 Aurelius Springport Townline Rd. Auburn, NY 13021
WEB ADDRESS:	http://chp.nyserda.org/facilities/details.cfm?facility=70

The U.S. Environmental Protection Agency's Office of Research and Development (EPA-ORD) operates the Environmental Technology Verification (ETV) program to facilitate the deployment of innovative technologies through performance verification and information dissemination. The goal of ETV is to further environmental protection by accelerating the acceptance and use of improved and innovative environmental technologies. ETV seeks to achieve this goal by providing high-quality, peer-reviewed data on technology performance to those involved in the purchase, design, distribution, financing, permitting, and use of environmental technologies.

ETV works in partnership with recognized standards and testing organizations, stakeholder groups that consist of buyers, vendor organizations, and permitters, and with the full participation of individual technology developers. The program evaluates the performance of technologies by developing test plans that are responsive to the needs of stakeholders, conducting field or laboratory tests, collecting and analyzing data, and preparing peer-reviewed reports. All evaluations are conducted in accordance with rigorous quality assurance protocols to ensure that data of known and adequate quality are generated and that the results are defensible.

The Greenhouse Gas Technology Center (GHG Center), operated by Southern Research Institute (Southern), is one of six verification organizations operating under the ETV program. A technology area

of interest to some GHG Center stakeholders is distributed electrical power generation (DG), particularly with combined heat and power (CHP) capabilities.

The GHG Center collaborated with the New York State Energy Research and Development Authority (NYSERDA) to evaluate the performance of a Caterpillar Model G379 internal combustion engine and generator - combined heat and power (CHP) system manufactured by Martin Machinery and fueled with biogas generated at a dairy farm. The system is owned and operated by Patterson Farms near Auburn, New York.

TECHNOLOGY DESCRIPTION

The Patterson Farm is a dairy farm in upstate New York housing approximately 1,725 cows and heifers. Farm operations generate approximately 50,000 gallons per day of manure and process water. This waste is collected and pumped to a complete mix anaerobic digester designed by RCM Digesters of Berkeley, California. The digester's dimensions are approximately 135 by 125 by 16 feet deep with a total waste capacity of approximately 270,000 cubic feet. Following the digester, solids are separated and composted in a solids removal system. Composted solids are later used as animal bedding and separated liquids are stored in a lagoon until used in the fields.

In addition to farm waste, operators also feed cheese whey waste generated off-site into the digester. The anaerobic digestion system produces biogas that is typically about 45 percent methane and has an average lower heating value (LHV) of approximately 525 Btu/scf. Approximately 4,800 cfh of the biogas is used to fuel an on-site DG/CHP system, and the remainder is flared. The DG/CHP system consists of a Caterpillar Model 379, 200 kW engine-generator set with integrated heat recovery capability. The engine tested was not equipped with any add-on emission control equipment

Prior to being used as fuel, the wet biogas is passed through two Filtration Systems, Inc. Model G82308 water filtration units arranged in series to remove moisture from the gas. Dry biogas is then metered and delivered to the engine. During normal farm operations, the engine generates nominal 187 kW power at an electrical efficiency of approximately 22 percent. The facility is equipped with net power metering so that excess power generated on-site can be exported to the grid and credited. The engine is equipped with a heat recovery system that recovers heat to warm the digester. Excess heat is dissipated through a radiator. Water with trace amounts of rust inhibitor is used as the heat transfer fluid. The farm has plans to expand engine heat use by supplying hot water to the milking parlor in the future. This expansion would increase biogas utilization at the site, decrease flare emissions, and improve thermal efficiency of the CHP system.

VERIFICATION DESCRIPTION

Field testing was conducted from May 2, 2007 through May 26, 2007. The defined system under test (SUT) was tested to determine performance for the following verification parameters:

- Electrical Performance
- Electrical Efficiency
- CHP Thermal Performance
- Emissions Performance
- NO_X and CO_2 Emission Offsets

The verification included a series of controlled test periods on May 2, 2007 in which the GHG Center maintained steady system operations for three one-hour test periods at three loads: 100%, 75%, and 50% of capacity (200, 150, and 100 kW, respectively) to evaluate electrical and CHP efficiency and emissions performance. The controlled tests were followed by a 7-day period of continuous monitoring to examine heat and power output, power quality, efficiency, and estimated annual emission reductions.

Rationale for the experimental design, determination of verification parameters, detailed testing procedures, test log forms, and QA/QC procedures can be found in the draft ETV Generic Verification Protocol (GVP) for DG/CHP verifications developed by the GHG Center. Site specific information and details regarding instrumentation, procedures, and measurements specific to this verification were detailed in the Test and Quality Assurance Plan titled *Test and Quality Assurance Plan – Electric Power and Heat Production Using Renewable Biogas at Patterson Farms.*

Quality assurance (QA) oversight of the verification testing was provided following specifications in the ETV Quality Management Plan (QMP). The GHG Center's QA manager conducted an audit of data quality on a representative portion of the data generated during this verification and a review of this report. Data review and validation was conducted at three levels including the field team leader (for data generated by subcontractors), the project manager, and the QA manager. Through these activities, the QA manager has concluded that the data meet the data quality objectives that are specified in the Test and Quality Assurance Plan.

VERIFICATION OF PERFORMANCE

Electrical and Thermal Performance

Table S-1. Patterson Farms DG/CHP System Electrical and Thermal Performance

Test ID		Heat Input (MBtu/h)	Electrical Power Generation Performance		Digester Loop Heat Recovery Performance		CHP Efficiency (%)	Radiator Loop Heat Rejected (MBtu/h)
			Power Generated (kW)	Electrical Efficiency (%)	Heat Recovered (MBtu/h)	Thermal Efficiency (%)		
200 kW	Run 1	2.45	192	26.8	0.164	6.72	33.5	1.60
	Run 2	2.44	191	26.6	0.215	8.77	35.4	1.34
	Run 3	2.44	190	26.6	0.218	8.94	35.5	1.34
	Avg.	**2.45**	**191**	**26.7**	**0.199**	**8.14**	**34.8**	**1.42**
150 kW	Run 1	2.39	153	21.8	0.0907	3.79	25.6	2.21
	Run 2	2.40	153	21.8	0.142	5.93	27.7	1.60
	Run 3	2.39	153	21.9	0.141	5.89	27.8	1.59
	Avg.	**2.39**	**153**	**21.8**	**0.125**	**5.20**	**27.0**	**1.80**
100 kW	Run 1	2.36	104	15.0	0.114	4.84	19.9	1.73
	Run 2	2.36	104	15.0	0.0237	1.00	16.0	6.15
	Run 3	2.37	104	15.0	0.0131	0.553	15.5	7.63
	Avg.	**2.36**	**104**	**15.0**	**0.0502**	**2.13**	**17.1**	**5.17**

- Electrical efficiency averaged approximately 26.7 percent at this site at 200 kW, 21.8 percent at 150 kW, and 15.0 percent at 100 kW.

- Heat recovery and use during the controlled test periods averaged 0.199 MBtu/h at 200 kW, 0.125 MBtu/h at 150 kW, and 0.00502 MBtu/h at 100 kW. Due to low thermal demand in the digester, the majority of heat generated by the CHP system was dissipated through the radiator loop. Thermal efficiency for the digester loop at this site averaged 8.14 percent at 200 kW, 5.20 percent at 150 kW, and 2.13 percent at 100 kW.

- Runs 2 and 3 at 50% load (100 kW) showed substantially lower heat recovered and thermal efficiency for the digester loop than that measured during Run 1. Examining the data showed that water flow in the digester loop dropped significantly during Runs 2 and 3. During these runs, it appears that heat stopped going to the digester and was instead dumped to the radiator, as shown by the increased radiator loop heat rejected. Run 1 is more representative of normal heat recovery performance for the digester at 50% load.

- During the 7-day monitoring period, the system operated for a total of total of approximately 167 hours, or 99 percent of the time. During this time, a total of 32,239 kWh of electricity was generated. Net electrical efficiency during the monitoring period averaged 28 percent and thermal efficiency for the digester heat recovery loop averaged 18 percent, for a total CHP efficiency of 46 percent.

Emissions Performance

Table S-2. Patterson Farms DG/CHP System Emissions during Controlled Tests

Test ID		Power (kW)	CO Emissions			CO_2 Emissions		
			ppm	lb/h	lb/kWh	ppm	lb/h	lb/kWh
200 kW	Run 1	192	182	0.389	0.00202	127000	271	1.41
	Run 2	191	354	0.755	0.00396	128000	274	1.44
	Run 3	190	337	0.718	0.00378	129000	276	1.45
	Avg.	**191**	**291**	**0.621**	**0.00325**	**128000**	**274**	**1.44**
150 kW	Run 1	153	21600	40.1	0.262	129000	240	1.57
	Run 2	153	22300	41.5	0.272	131000	243	1.59
	Run 3	153	22400	41.7	0.272	131000	243	1.59
	Avg.	**153**	**22100**	**41.1**	**0.269**	**130000**	**242**	**1.58**
100 kW	Run 1	104	29700	52.5	0.506	123000	217	2.09
	Run 2	104	29900	52.9	0.509	124000	219	2.11
	Run 3	104	30300	53.5	0.516	124000	220	2.12
	Avg.	**104**	**30000**	**53.0**	**0.510**	**123000**	**218**	**2.10**

- The average CO emission rate normalized to power output was 0.00325 lb/kWh for the 100% load tests, 0.269 lb/kWh at the 75% load tests, and 0.510 lb/kWh for the 50% load tests. THC emissions averaged 0.0202 lb/kWh at 100% load, 0.0359 lb/kWh at 75% load, and 0.0539 lb/kWh at 50% load. NO_x emissions averaged 0.0213 lb/kWh at 100% load, 0.00521 lb/kWh at 75% load, and 0.00123 lb/kWh at 50% load.

Table S-2 continued. Patterson Farms DG/CHP System Emissions during Controlled Tests

Test ID		Power (kW)	THC Emissions			NOx Emissions		
			ppm	lb/h	lb/kWh	ppm	lb/h	lb/kWh
200 kW	Run 1	192	1840	3.92	0.0204	1870	3.99	0.0208
	Run 2	191	1810	3.86	0.0203	1890	4.04	0.0212
	Run 3	190	1790	3.81	0.0200	1950	4.17	0.0219
	Avg.	**191**	**1810**	**3.87**	**0.0202**	**1910**	**4.07**	**0.0213**
150 kW	Run 1	153	2950	5.49	0.0359	409	0.760	0.00497
	Run 2	153	2920	5.44	0.0355	430	0.800	0.00523
	Run 3	153	2960	5.50	0.0359	447	0.832	0.00543
	Avg.	**153**	**2950**	**5.48**	**0.0359**	**429**	**0.797**	**0.00521**
100 kW	Run 1	104	3220	5.70	0.0549	71.9	0.127	0.00123
	Run 2	104	3170	5.61	0.0540	73.3	0.130	0.00125
	Run 3	104	3100	5.48	0.0529	70.8	0.125	0.00121
	Avg.	**104**	**3160**	**5.59**	**0.0539**	**72.0**	**0.127**	**0.00123**

- Compared to the EGrid baseline emissions scenarios for the New York State and national grid regions, changes in annual NO_X emissions caused by use of the SUT are estimated to be about 31,700 lb/y higher for New York State and 29,300 lb/y higher for the national scenario. CO_2 emission rates averaged 1.44 lb/kWh at 100% load, 1.58 lb/kWh at 75% load, and 2.10 lb/kWh at 50% load. For CO_2, reductions in estimated annual emissions for the New York State and national grid (including CO_2 equivalent emissions eliminated through the use of waste CH_4 at the farm), are 13,613,000 lb/y 14,272,000 lb/y, respectively.

Power Quality Performance

- Average electrical frequency was 60.0 Hz and average power factor was 99.7 percent.
- The average current THD was 5.90 percent and the average voltage THD was 3.14 percent. The IEEE recommended threshold for THD is 5 percent.

Details on the verification test design, measurement test procedures, and Quality Assurance/Quality Control (QA/QC) procedures can be found in the Test Plan titled *Test and Quality Assurance Plan – Electric Power and Heat Production Using Renewable Biogas at Patterson Farms* (Southern 2007). Detailed results of the verification are presented in the final report titled *Environmental Technology Verification Report – Electric Power and Heat Production Using Renewable Biogas at Patterson Farms* (Southern 2007). Both can be downloaded from the GHG Center's web-site (www.sri-rtp.com) or the ETV Program web-site (www.epa.gov/etv).

Signed by Sally Gutierrez (10/09/2007)

Sally Gutierrez
Director
National Risk Management Research Laboratory
Office of Research and Development

Signed by Tim Hansen (09/26/2007)

Tim Hansen
Director
Greenhouse Gas Technology Center
Southern Research Institute

Notice: GHG Center verifications are based on an evaluation of technology performance under specific, predetermined criteria and the appropriate quality assurance procedures. The EPA and Southern Research Institute make no expressed or implied warranties as to the performance of the technology and do not certify that a technology will always operate at the levels verified. The end user is solely responsible for complying with any and all applicable Federal, State, and Local requirements. Mention of commercial product names does not imply endorsement or recommendation.

EPA REVIEW NOTICE

This report has been peer and administratively reviewed by the U.S. Environmental Protection Agency, and approved for publication. Mention of trade names or commercial products does not constitute endorsement or recommendation for use.

(this page intentionally left blank)

SRI/USEPA-GHG-VR-43
September 2007

Greenhouse Gas Technology Center

A U.S. EPA Sponsored Environmental Technology Verification (ETV) Organization

Environmental Technology Verification Report

Electric Power and Heat Production Using Renewable Biogas at Patterson Farms

Prepared By:
Greenhouse Gas Technology Center
Southern Research Institute
3000 Aerial Center Parkway, Suite 160
Morrisville, NC 27560 USA
Telephone: 919-806-3456

Under EPA Cooperative Agreement R-82947801
and NYSERDA Agreement 7009

U.S. Environmental Protection Agency
Office of Research and Development
National Risk Management Research Laboratory
Air Pollution Prevention and Control Division
Research Triangle Park, NC 27711 USA

EPA Project Officer: David A. Kirchgessner
NYSERDA Project Officer: James Foster

(this page intentionally left blank)

TABLE OF CONTENTS

Page

LIST OF FIGURES ..... **ii**
LIST OF TABLES ..... **ii**
ACKNOWLEDGMENTS ..... **iii**
ACRONYMS AND ABBREVIATIONS ..... **iv**

1.0 INTRODUCTION **1-1**
1.1. BACKGROUND 1-1
1.2. PATTERSON FARMS DG/CHP TECHNOLOGY DESCRIPTION 1-2
1.3. PERFORMANCE VERIFICATION OVERVIEW 1-3
1.3.1. Electrical Performance (GVP §2.0) 1-5
1.3.2. Electrical Efficiency (GVP §3.0) 1-6
1.3.3. CHP Thermal Performance (GVP §4.0) 1-6
1.3.4. Emissions Performance (GVP §5.0) 1-7
1.3.5. Field Test Procedures and Site Specific Instrumentation 1-7
1.3.6. Estimated NO_X and CO_2 Emission Offsets 1-11

2.0 VERIFICATION RESULTS **2-1**
2.1. OVERVIEW 2-1
2.2. ELECTRICAL AND THERMAL PERFORMANCE AND EFFICIENCY 2-2
2.2.1. Electrical Power Output, Heat Production, and Efficiency during Controlled Tests 2-2
2.2.2. Electrical Energy Production and Efficiency during the Extended Test Period 2-5
2.3. POWER QUALITY PERFORMANCE 2-7
2.4. EMISSIONS PERFORMANCE 2-7
2.4.1. Patterson Farms Exhaust Emissions 2-7
2.4.2. Estimation of Annual NO_X and CO_2 Emission Reductions 2-8

3.0 DATA QUALITY ASSESSMENT **3-1**
3.1. DATA QUALITY OBJECTIVES 3-1
3.2. DOCUMENTATION OF MEASUREMENT QUALITY OBJECTIVES 3-2
3.2.1. Electrical Generation Performance 3-2
3.2.2. Electrical Efficiency Performance 3-2
3.2.3. CHP Thermal Efficiency Performance 3-3
3.2.4. Emissions Measurement MQOs 3-3
3.3. AUDITS 3-4

4.0 REFERENCES **4-1**

LIST OF FIGURES

		Page
Figure 1-1	Patterson Farms in Auburn, New York	1-3
Figure 1-2	Patterson Farms DG/CHP System Boundary Diagram	1-4
Figure 1-3	Location of Test Instrumentation for SUT Electrical System	1-10
Figure 1-4	Location of Test Instrumentation for SUT Thermal System	1-10
Figure 2-1	Patterson Farms Generator Output over Long-Term Monitoring	2-6
Figure 2-2	Patterson Farms Efficiencies over Long-Term Monitoring	2-6

LIST OF TABLES

		Page
Table 1-1	Controlled and Extended Test Periods	1-5
Table 1-2	Site Specific Instrumentation for Patterson Farms DG/CHP System Verification	1-9
Table 2-1	Variability in Operating Conditions During Controlled Test Periods	2-2
Table 2-2	Patterson Farms DG/CHP System Ambient Conditions during Controlled Tests	2-3
Table 2-3	Patterson Farms DG/CHP System Electrical and Thermal Performance	2-4
Table 2-4	Patterson Farms DG/CHP System Heat Recovery Conditions	2-4
Table 2-5	Patterson Farms DG/CHP System Heat Input Determination	2-5
Table 2-6	Summary of Patterson Farms DG/CHP System Power Quality	2-7
Table 2-7	Patterson Farms DG/CHP System Emissions during Controlled Test Periods	2-7
Table 2-8	Estimation of Patterson Farms Emission Reductions	2-9
Table 3-1	Electrical Generation Performance MQOs	3-2
Table 3-2	Electrical Efficiency MQOs	3-3
Table 3-3	CHP Thermal Efficiency MQOs	3-3
Table 3-4	Summary of Emissions Testing Calibrations and QA/QC Checks	3-4

ACKNOWLEDGMENTS

The Greenhouse Gas Technology Center wishes to thank NYSERDA, especially Jim Foster, for supporting this verification and reviewing and providing input on the testing strategy and this Verification Report. Thanks are also extended to Patterson Farms, especially Jon and Connie Patterson, for their input supporting the verification and assistance with field testing activities. Finally, thanks go out to Connected Energy Corp., especially Mark Ginther, Kevin Hann, and Thomas Yeh, for their assistance with field testing activities.

ACRONYMS AND ABBREVIATIONS

ADQ	Audit of Data Quality
Btu/h	British thermal units per hour
Btu/scf	British thermal units per standard cubic feet
CHP	combined heat and power
CO	carbon monoxide
CO_2	carbon dioxide
CT	current transformer
DG	distributed generation
DQO	data quality objective
DUT	device under test
EPA	Environmental Protection Agency
ETV	Environmental Technology Verification
FID	flame ionization detector
GHG Center	Greenhouse Gas Technology Center
GVP	generic verification protocol
gpm	gallons per minute
Hz	hertz
kVA	kilovolt-amperes
kVAR	kilovolt-amperes reactive
kW	kilowatts
kWh	kilowatt hours
lb/h	pounds per hour
lb/kWh	pounds per kilowatt-hour
lb/MWh	pounds per megawatt-hour
LHV	lower heating value
MBtu/h	million British thermal units per hour
MQO	measurement quality objective
MWh	megawatt-hour
NDIR	non-dispersive infra-red
NIST	National Institute of Standards and Technology
NOx	nitrogen oxides
NYSERDA	New York State Energy Research and Development Authority
O_2	oxygen
PEMS	portable emissions measurement system
ppm	parts per million volume, dry
psia	pounds per square inch, absolute
QA/QC	Quality Assurance/Quality Control
QMP	Quality Management Plan
RTD	resistance temperature detector
scfh	standard cubic feet per hour
SUT	system under test
TQAP	Test and Quality Assurance Plan
THCs	total hydrocarbons
THD	total harmonic distortion

1.0 INTRODUCTION

1.1. BACKGROUND

The U.S. Environmental Protection Agency's Office of Research and Development (EPA-ORD) operates the Environmental Technology Verification (ETV) program to facilitate the deployment of innovative technologies through performance verification and information dissemination. The goal of ETV is to further environmental protection by accelerating the acceptance and use of improved and innovative environmental technologies. Congress funds ETV in response to the belief that there are many viable environmental technologies that are not being used for the lack of credible third-party performance data. With performance data developed under this program, technology buyers, financiers, and permitters in the United States and abroad will be better equipped to make informed decisions regarding environmental technology purchase and use.

The Greenhouse Gas Technology Center (GHG Center) is one of six verification organizations operating under the ETV program. The GHG Center is managed by EPA's partner verification organization, Southern Research Institute (Southern), which conducts verification testing of promising greenhouse gas mitigation and monitoring technologies. The GHG Center's verification process consists of developing verification protocols, conducting field tests, collecting and interpreting field and other data, obtaining independent stakeholder input, and reporting findings. Performance evaluations are conducted according to externally reviewed verification Test and Quality Assurance Plans (TQAPs) and established protocols for quality assurance.

The GHG Center is guided by volunteer groups of stakeholders. The GHG Center's Executive Stakeholder Group consists of national and international experts in the areas of climate science and environmental policy, technology, and regulation. It also includes industry trade organizations, environmental technology finance groups, governmental organizations, and other interested groups. The GHG Center's activities are also guided by industry specific stakeholders who provide guidance on the verification testing strategy related to their area of expertise and peer-review key documents prepared by the GHG Center.

In recent years, a primary area of interest to GHG Center stakeholders has been distributed electrical power generation systems. Distributed generation (DG) refers to equipment, typically ranging from 5 to 1,000 kilowatts (kW) that provide electric power at a site closer to customers than central station generation. A DG unit can be connected directly to the customer or to a utility's transmission and distribution system. Examples of technologies available for DG include: internal combustion engine generators; photovoltaics; wind turbines; fuel cells; and microturbines. DG technologies provide customers one or more of the following main services: standby generation; peak shaving generation; base load generation; or cogeneration. DG systems that utilize renewable energy sources can provide even greater environmental and economic benefits.

Since 2002, the GHG Center and the New York State Energy Research and Development Authority (NYSERDA) have collaborated and shared the cost of verifying several new DG technologies throughout the state of New York under NYSERDA-sponsored programs. The verification described in this document evaluated the performance of one such DG system: a Caterpillar Model G379 internal combustion engine and generator - combined heat and power (CHP) system manufactured by Martin

Machinery and fueled with biogas generated at a dairy farm. The system is owned and operated by Patterson Farms near Auburn, New York.

The GHG Center evaluated the performance of the Patterson Farms DG/CHP system by conducting field tests over a 5-day verification period (April 30 – May 1, 2007). These tests were planned and executed by the GHG Center to independently verify the electricity generation rate, thermal energy recovery rate, electrical power quality, energy efficiency, emissions, and greenhouse gas emission reductions for the DG/CHP system as operated at Patterson Farms. Details on the verification test design, measurement test procedures, and quality assurance/quality control (QA/QC) procedures are contained in two related documents.

Technology and site specific information can be found in the document titled *Test and Quality Assurance Plan – Electric Power and Heat Production Using Renewable Biogas at Patterson Farms* [1]. It can be downloaded from the GHG Center's web-site (www.sri-rtp.com) or the ETV Program web-site (www.epa.gov/etv). This TQAP describes the system under test (SUT), project participants, site specific instrumentation and measurements, and verification specific QA/QC goals. The TQAP was reviewed and revised based on comments received from NYSERDA, Patterson Farms, and the EPA Quality Assurance Team. The TQAP meets the requirements of the GHG Center's Quality Management Plan (QMP) and satisfies the ETV QMP requirements.

Rationale for the experimental design, determination of verification parameters, detailed testing procedures, test log forms, and QA/QC procedures can be found in the Association of State Energy Research and Technology Transfer Institutions (ASERTTI) DG/CHP Distributed Generation and Combined Heat and Power Performance Protocol for Field Testing [2]. It can be downloaded from the web location www.dgdata.org/pdfs/field_protocol.pdf. The GHG Center has adopted portions of this protocol as a draft generic verification protocol (GVP) for DG/CHP verifications [3]. This ETV performance verification of the Patterson Farms system was based on the GVP.

The remainder of Section 1.0 describes the Patterson Farms DG/CHP system technology and test facility, and outlines the performance verification procedures that were followed. Section 2.0 presents test results, and Section 3.0 assesses the quality of the data obtained. Section 4.0, submitted by Patterson Farms or NYSERDA, presents additional information regarding the CHP system. Information provided in Section 4.0 has not been independently verified by the GHG Center.

1.2. PATTERSON FARMS DG/CHP TECHNOLOGY DESCRIPTION

The Patterson Farm, shown in Figure 1-1, is a dairy farm in upstate New York housing approximately 1,725 cows and heifers. Farm operations generate approximately 50,000 gallons per day of manure and process water. This waste is collected and pumped to a complete mix anaerobic digester designed by RCM Digesters of Berkeley, California. The digester's dimensions are approximately 135 by 125 by 16 feet deep with a total waste capacity of approximately 270,000 cubic feet. Following the digester, solids are separated and composted in a solids removal system. Composted solids are later used as animal bedding and separated liquids are stored in a lagoon until used in the fields.

In addition to farm waste, operators also feed cheese whey waste generated off-site into the digester. The anaerobic digestion system produces biogas that is typically about 45 percent methane and has an average lower heating value (LHV) of approximately 525 Btu/scf. Approximately 4,800 cfh of the biogas is used to fuel an on-site DG/CHP system, and the remainder is flared.

The DG/CHP system consists of a Caterpillar Model 379, 200 kW engine-generator set with integrated heat recovery capability. The engine tested was not equipped with any add-on emission control equipment

Figure 1-1. Patterson Farms in Auburn, New York

Prior to being used as fuel, the wet biogas is passed through two Filtration Systems, Inc. Model G82308 water filtration units arranged in series to remove moisture from the gas. Dry biogas is then metered and delivered to the engine. During normal farm operations, the engine generates nominal 187 kW power at an electrical efficiency of approximately 22 percent. The facility is equipped with net power metering so that excess power generated on-site can be exported to the grid and credited. The engine is equipped with a heat recovery system that recovers heat to warm the digester. Excess heat is dissipated through a radiator. Water with trace amounts of rust inhibitor is used as the heat transfer fluid. The farm has plans to expand engine heat use by supplying hot water to the milking parlor in the future. This expansion would increase biogas utilization at the site, decrease flare emissions, and improve thermal efficiency of the CHP system.

1.3. PERFORMANCE VERIFICATION OVERVIEW

Following the GVP, the verification included evaluation of the DG/CHP system performance over a series of controlled test periods. The TQAP specifies testing at three loads: 100%, 75%, and 50% of capacity (200, 150, and 100 kW, respectively). In addition to the controlled test periods, the TQAP specifies that up to one week of continuous fuel consumption, power generation, and power quality data would be collected to characterize the system performance over normal facility operations. The Patterson Farms site is among those for which NYSERDA has contracted Connected Energy Corp. to install equipment and remotely collect data for continuous long term monitoring. Real-time and archived data is publicly accessible via the web at www.enerview.com/ny. GHG Center personnel validated Connected Energy's logged data while at the site during the controlled test periods. After validating Connected Energy's data, GHG Center personnel determined that it was reasonable to use Connected Energy's data for the long-term monitoring period. GHG Center data analysts downloaded data for the week of May 20, 2007 to May 26, 2007 from NYSERDA's web-based database, which contains Connected Energy's logged data. The home page for the database containing all of NYSERDA's CHP demonstration sites can

be found at http://chp.nyserda.org and the specific link for the Patterson Farms data is http://chp.nyserda.org/facilities/details.cfm?facility=70.

The Patterson Farms verification was limited to the performance of the SUT within a defined system boundary. Figure 1-2 illustrates the SUT boundary for this verification.

The figure indicates two distinct boundaries. The device under test (DUT) or product boundary includes the Caterpillar engine and generator set and the heat recovery system and all of its internal components. The SUT includes the DUT as well as parasitic loads present in this application: the water circulation pump, the gas filtration system, and the radiator fan motor. Following the GVP, this verification will incorporate the system boundary into the performance evaluation.

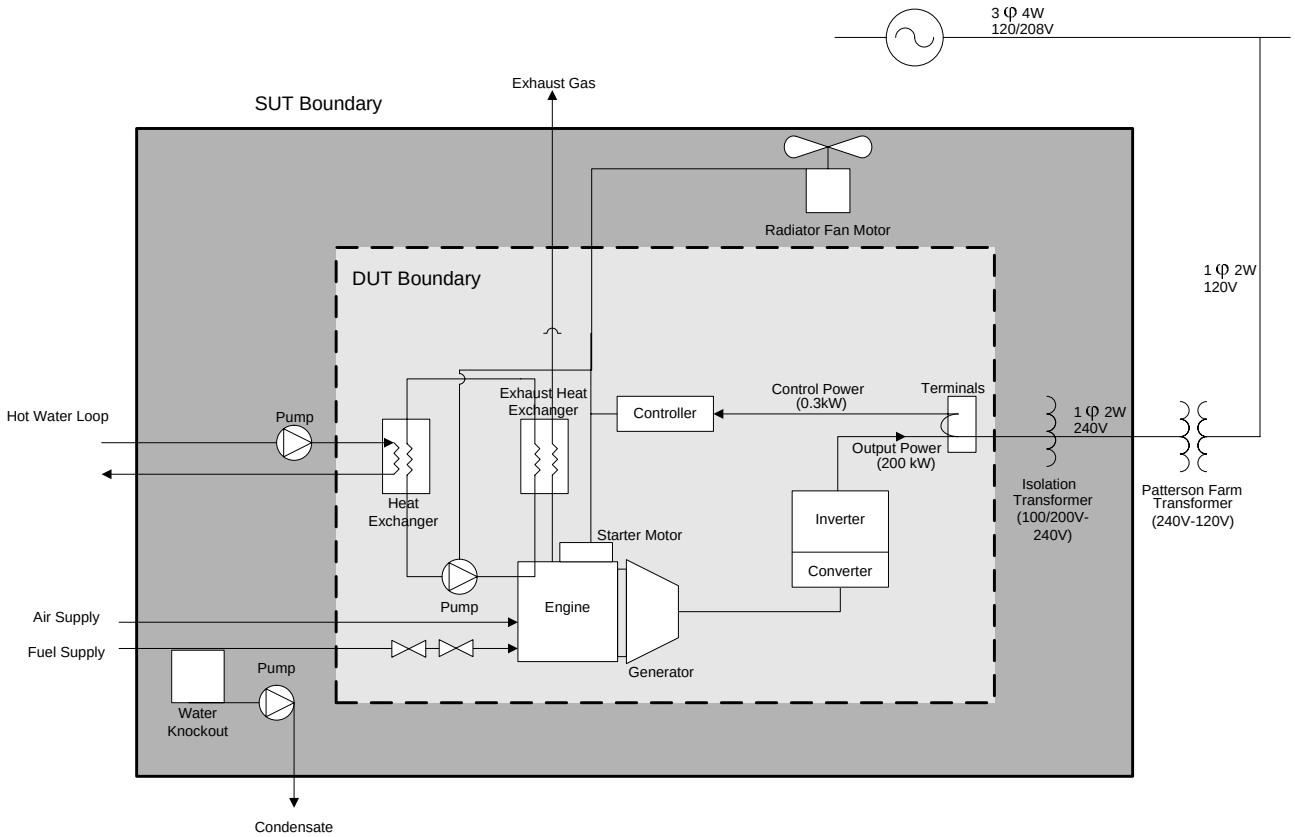

Figure 1-2. Patterson Farms DG/CHP System Boundary Diagram

The defined SUT was tested to determine performance for the following verification parameters:

- Electrical Performance
- Electrical Efficiency
- CHP Thermal Performance
- Emissions Performance
- Nitrogen Oxides (NO_X) and Carbon Dioxide (CO_2) Emission Offsets

Each of the verification parameters listed above were evaluated during the controlled or extended monitoring periods as summarized in Table 1-1. This table also specifies the dates and time periods during which the testing was conducted. Simultaneous monitoring for power output, heat recovery rate,

heat input, ambient meteorological conditions, and exhaust emissions was performed during each of the controlled test periods. Fuel gas samples were collected to determine fuel lower heating value and other gas properties. Average electrical power output, heat recovery rate, energy conversion efficiency (electrical, thermal, and total), and exhaust stack emission rates are reported for each test period.

Results from the extended monitoring test are used to report total electrical energy generated and used on site, estimated greenhouse gas emission reductions, and electrical, thermal, and CHP efficiencies.

Table 1-1. Controlled and Extended Test Periods

Controlled Test Periods			
Start Date, Time	**End Date, Time**	**Test Condition**	**Verification Parameters Evaluated**
05/02/2007, 09:21	05/02/2007, 12:49	Power command 200 kW, three 60 minute test runs	NO_X, CO, CO_2, and THC emissions; electrical, thermal, and CHP efficiency
05/02/2007, 13:41	05/02/2007, 17:04	Power command 150 kW, three 60 minute test runs	NO_X, CO, CO_2, and THC emissions; electrical, thermal, and CHP efficiency
05/02/2007, 17:18	05/02/2007, 20:38	Power command 100 kW, three 60 minute test runs	NO_X, CO, CO_2, and THC emissions; electrical, thermal, and CHP efficiency

Extended Test Period			
Start Date, Time	**End Date, Time**	**Test Condition**	**Verification Parameters Evaluated**
05/20/2007	05/26/2007	Unit operated at normal power command	Daily and total electricity generated; electrical, thermal, and CHP efficiency; emission offsets

The following sections identify the sections of the GVP that were followed during this verification, identify site specific instrumentation for each, and specify any exceptions or deviations.

1.3.1. Electrical Performance (GVP §2.0)

Determination of electrical performance was conducted following §2.0 and Appendix D1.0 of the GVP. The following parameters were measured:

- Real power, kW
- Apparent power, kilovolt-amperes (kVA)
- Reactive power, kilovolt-amperes reactive (kVAR)
- Power factor, %
- Voltage total harmonic distortion (THD), %
- Current THD, %
- Frequency, Hertz (Hz)
- Voltage, V
- Current, A

The verification parameters were measured with a digital power meter manufactured by Power Measurements Ltd. (Model ION 7500). The meter operated continuously, unattended, scanning all power parameters once per second and computing and recording one-minute averages. The rated accuracy of the power meter is ± 0.1 percent, and the rated accuracy of the current transformers (CTs) needed to employ the meter at this site is ± 1.0 percent. Overall power measurement error was ± 1.0 percent.

1.3.2. Electrical Efficiency (GVP §3.0)

Determination of electrical efficiency was conducted following §3.0 and Appendix D2.0 of the GVP. The following parameters were measured:

- Real power production, kW
- Ambient temperature, ^{o}F
- Ambient barometric pressure, pounds per square inch, absolute (psia)
- Fuel LHV, British thermal units per standard cubic feet (Btu/scf)
- Fuel consumption, scfh

Real power production was measured by the Power Measurements Ltd. Digital power meter, as described in §1.3.1 above. Ambient temperature and pressure were recorded by a Horiba OBS-2200 portable emissions monitoring system (PEMS) (see section 1.3.4 for details).

Gas flow was measured by a Model 5M175 Series B3 Roots Meter manufactured by Dresser Measurement with a specified accuracy of ± 1%. Gas temperature was measured by a Class A 4-wire platinum resistance temperature detector (RTD). The specified accuracy of the RTD is ± 0.6 ^{o}F. Gas pressure was measured by an Omega Model PX205 Pressure Transducer. The specified accuracy of the pressure transducer is ± 0.25% of reading over a range of 0 – 30 psia. Three gas samples were collected and shipped to Empact Analytical of Brighton, Colorado for LHV analysis according to ASTM Method 1945.

The external parasitic load introduced by the heat transfer circulation pump, the gas filtration system, and the radiator fan motor was nominal and insignificant (approximately 1.0 kW) and was therefore not measured during the verification. It was not included in the analysis.

1.3.3. CHP Thermal Performance (GVP §4.0)

Determination of CHP thermal performance was conducted following §4.0 and Appendix D3.0 of the GVP. The following parameters were quantified:

- Thermal performance in heating service, British thermal units per hour (Btu/h)
- Thermal efficiency in heating service, %
- Actual SUT efficiency in heating service as the sum of electrical and thermal efficiencies, %

To quantify these parameters, heat recovery rate from the DUT was measured on the heat transfer loop and defined as the heat recovered and used by the facility to heat the digester. This verification employed a Sparling Economag Model FM618 Electromagnetic Flowmeter with a nominal linear range of 0 to 40 gallons per minute (gpm). Accuracy of this meter is ± 1.0 % of reading. Class A 4-wire platinum RTDs were used to determine the transfer fluid supply and return temperatures. The specified accuracy of the RTDs is ± 0.6 °F. Pretest calibrations documented the RTD performance. Following Section 4.2 of the

GVP, CHP performance determinations also require heat transfer fluid density (ρ) and specific heat (c_p). These values were obtained from standard tables for water [4]. Heat dissipated by the radiator loop was also measured during the testing, but is not included in the thermal energy recovery and use efficiency determinations.

1.3.4. Emissions Performance (GVP §5.0)

Determination of emissions performance was conducted following §5.0 and Appendix D4.0 of the GVP and included emissions of NO_X, carbon monoxide (CO), CO_2, and total hydrocarbons (THC). Emissions testing was performed by GHG Center personnel using a Horiba OBS-2200 PEMS. The PEMS is essentially a miniaturized laboratory analyzer bench which has been optimized for portable use. The instrument meets or exceeds Title 40 CFR 1065 requirements for in-use field testing of engine emissions.

This PEMS is suitable for testing a wide variety of stationary sources as well as the mobile sources for which it is intended. Accuracy for all analytes is better than ± 2.5 % full scale (FS), while linearity is better than ± 1.0 % FS. Exhaust gas concentrations must be integrated with exhaust gas flow rates to yield mass emission rates. EPA Method 2 was used to determine exhaust gas volumetric flow rates.

Response times for all OBS-2200 analyzers are approximately two seconds alone and five seconds with the heated umbilical in the sample line. Test personnel established exact analyzer response times prior to testing. Software algorithms then align analyzer data outputs with other sensor signals, such as exhaust gas flow. Resolution depends on the analyzer range setting, but is between four and five significant digits.

The OBS-2200 measures CO and CO_2 with non-dispersive infra-red (NDIR) detectors. The OBS-2200 does not require a separate moisture removal system for the CO and CO_2 NDIR detectors. The NO_X analyzer section consists of a chemilumenescence detector with a NO_2 / NO converter. This is the kind of system specified in Title 40 CFR 60, Appendix A, Method 7E, "Determination of Nitrogen Oxides Emissions from Stationary Sources", which is a reference method for NO_X.

The OBS-2200 measures THC with a flame ionization detector (FID). This method corresponds to the system specified in Title 40 CFR 60 Appendix A, Method 25, "Determination of Total Gaseous Non-methane Organic Emissions as Carbon", which is a reference method for THC.

The PEMS sample pump conveys all samples through a heated umbilical directly to heated analyzer sections, which eliminates the need to remove moisture and eliminates possible moisture scavenging.

Proposed calibration ranges for the gas analyzers are listed in Table 1-2. Results for each pollutant are reported in units of parts per million volume, dry (ppm), pounds per hour (lb/h), and pounds per kilowatt-hour (lb/kWh).

1.3.5. Field Test Procedures and Site Specific Instrumentation

Field testing followed the guidelines and procedures detailed in the following sections of the GVP:

- Electrical performance - §7.1
- Electrical efficiency - §7.2
- CHP thermal performance - §7.3
- Emissions performance - §7.4

Controlled load tests were conducted as three one-hour test replicates at cogeneration power commands of approximately 200, 150, and 100 kW. In addition to the controlled tests, system performance was monitored continuously while the unit operated under normal facility operations. Continuous measurements were recorded over a one-week period, including:

- Power output,
- Fuel consumption
- Heat recovery rate
- Ambient conditions (temperature and pressure)

Using these data, the GHG Center evaluated the Patterson Farms DG/CHP system performance for this site under typical facility operations.

Site specific measurement instrumentation is summarized in Table 1-2. The location of the instrumentation relative to the SUT is illustrated in Figures 1-3 and 1-4. All measurement instrumentation met the GVP specifications.

Table 1-2. Site Specific Instrumentation for Patterson Farms DG/CHP System Verification

Verification Parameter	Supporting Measurement	Actual Range of Measurement	Instrument	Instrument Range	Instrument Accuracy
Electrical Performance	Real power	102 – 193 kW	Power Measurements Ltd. ION power meter (Model 7500)	0 – 260 kW	± 0.1% of reading
	Power factor	99.68– 99.77 %		0 – 100 %	± 0.5% of reading
	Voltage THD	3.04 – 3.24 %		0 – 100 %	± 1% FS
	Current THD	5.35 – 6.37 %		0 – 100 %	± 1% FS
	Frequency	59.6 – 60.0 Hz		57 – 63 Hz	± 0.01% of reading
	Voltage	482 – 496 V		0 – 600 V	± 0.11% of reading
	Current	112 – 259 A		0 – 400 A	± 0.11% of reading
	Ambient temperature	49 – 67 °F	Horiba OBS-2200	-40 – 185 °F	± 0.3 °F
	Barometric pressure	14.4 – 14.6 psia	Horiba OBS-2200	0 – 17 psia	± 1.5% FS
Electrical Efficiency	Gas flow	3948 – 4575 acfh	Model 5M175 Roots Meter	0 – 5000 cfh	± 1% of reading
	Gas pressure	15.3 – 15.5 psia	Omega PX205 Pressure Transducer	0-30 psia	± 0.25% of reading
	Gas temperature	83 – 92 °F	Omega Class A 4-wire RTD	0 – 250 °F	± 0.6 °F
CHP Thermal Performance	Heat transfer loop flow	2 – 70 gpm	Sparling Economag Model FM618	0 –100 gpm	± 1.0% of reading
	Heat transfer supply temp.	110 – 120 °F	Omega Class A 4-wire RTD	0 – 250 °F	± 0.6 °F
	Heat transfer return temp.	103 – 108 °F	Omega Class A 4-wire RTD	0 – 250 °F	± 0.6 °F
Emissions Performance	NO_X concentration	60 – 2208 ppmv	Chemiluminescence	0 – 3000 ppmv	± 2% FS
	CO concentration	0 – 3.3 ppmv	(NDIR)-gas filter correlation	0 – 5 ppmv	± 2% FS
	CO_2 concentration	11 – 13.4 %	NDIR	0 – 16 %	± 2% FS
	THC concentration	1667 – 5611 ppmv	FID	0 – 10000 ppmv	± 2% FS

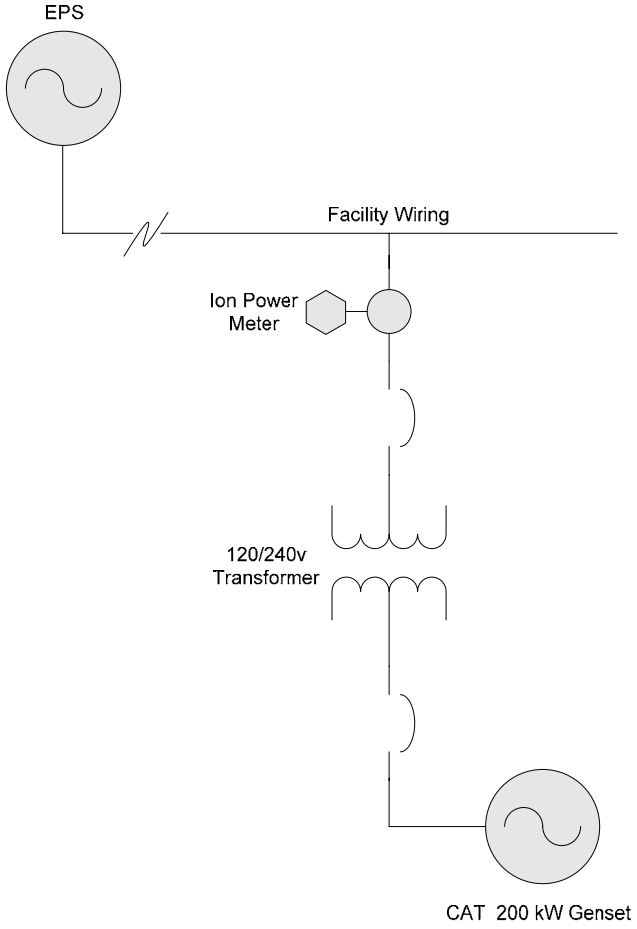

Figure 1-3. Location of Test Instrumentation for SUT Electrical System

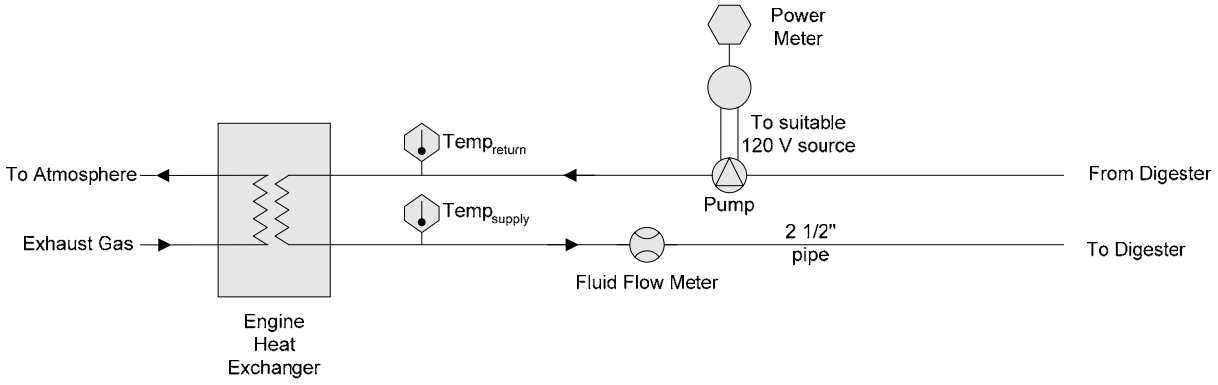

Figure 1-4. Location of Test Instrumentation for SUT Thermal System

1.3.6. Estimated NO_X and CO_2 Emission Offsets

Use of the DG/CHP system changes the NO_x and CO_2 emission rates associated with the operation of the Patterson Farms facility. Annual emission offsets for these pollutants were estimated and reported by subtracting emissions of the on-site DG/CHP system from emissions associated with baseline electrical power generation technology.

The TQAP provided the detailed procedure for estimating emission reductions resulting from electrical generation. The procedure correlates the estimated annual electricity savings in megawatt-hours (MWh) with EGrid New York State and nationwide electric power system emission rates in pounds per megawatt-hour (lb/MWh). For this verification, analysts assumed that the Patterson Farms system generates power at a rate similar to that recorded during the 100% fixed load tests throughout the entire year. Note that the EGrid database may sometimes treat emissions of CO_2 from combusting biogas (e.g., landfill gas, or LFG) as zero [see EGrid values for Puente Hills Energy Recovery (CA), Mallard Lake Electric (IL), and Arbor Hills (MI), all of which combust LFG]. If EGrid treats biogas combustion as having zero CO_2 emissions, an alternative approach to comparing CO_2 emissions with EGrid results would be to take the emissions from the DG/CHP system as zero. However, in following the DG/CHP generic protocol, this approach was not followed. The analysis does, however, estimate the CO_2 equivalent emissions that are eliminated by the use of waste generated methane as fuel. The projected amount of methane utilized by the CHP system (that would otherwise be emitted by the farm) was estimated based on the average verified fuel consumption rate and biogas methane content.

Since the heat recovered is currently only used to warm the digester, there is no real baseline emissions offset associated with heat production. Should the capacity to warm the milking parlor with CHP recovered heat be added at a later date, then additional emissions offset are likely at this site due to the reduction of utility-provided energy in the parlor. Emission reductions associated with use of farm waste as fuel were not calculated, as this process requires baseline GHG emission assessments of standard waste management practices. Due to the significant resources required to do this, this analysis is beyond the scope of this project, and therefore this verification includes emission reductions from electricity generation only.

(this page intentionally left blank)

2.0 VERIFICATION RESULTS

2.1. OVERVIEW

The controlled tests for this verification were conducted on May 2, 2007. The GHG Center acquired several types of data that represent the basis of verification results presented here. The following types of data were collected and analyzed during the verification:

- Continuous measurements (fuel gas pressure, temperature, and flow rate, power output and quality, heat recovery rate, parasitic load, and ambient conditions)
- Fuel gas heating value data
- Emissions testing data

The field team leader reviewed collected data for reasonableness and completeness while in the field. The field team leader also reviewed data from each of the controlled test periods to verify that variability criteria specified below in Section 2.2 were met. The emissions testing data was validated by reviewing instrument and system calibration data and ensuring that those and other reference method criteria were met. Calibrations for fuel flow, pressure, temperature, electrical and thermal power output, and ambient monitoring instrumentation were reviewed on site to validate instrument functionality. Other data such as fuel LHV analysis results were reviewed, verified, and validated after testing had ended. All collected data was classified as either valid, suspect, or invalid upon review, using the QA/QC criteria specified in the TQAP. Review criteria are in the form of factory and on-site calibrations, maximum calibration and other errors, audit gas analyses, and lab repeatability. Results presented here are based on measurements which met the specified data quality objectives (DQOs) and QC checks, and were validated by the GHG Center.

The GHG Center attempted to obtain a reasonable set of short-term data to examine daily trends in electricity and heat production, and power quality. It should be noted that these results may not represent performance over longer operating periods or at significantly different operating conditions.

Test results are presented in the following subsections:

Section 2.1 – Electrical and Thermal Performance and Efficiency
Section 2.2 – Power Quality Performance
Section 2.3 – Emissions Performance and Reductions

The results show that the Patterson Farms DG/CHP system produces high quality power and is capable of operating in parallel with the utility grid. The system produces an average 191 kW of electrical power at full load and electrical efficiency at full load averaged 26.7 percent. The average heat recovery rate for the digester measured during the controlled test periods at full load was 0.199 million Btu per hour (MBtu/h) and thermal efficiency averaged 8.14 percent.

CO emissions averaged 0.00325 lb/kWh at full load and emissions of CO_2 averaged 1.44 lb/kWh. THC emissions averaged 0.0202 lb/kWh and NOx emissions averaged 0.0213 lb/kWh. Detailed analyses are presented in the following sections.

In support of the data analyses, the GHG Center conducted an audit of data quality (ADQ). A full assessment of the quality of data collected throughout the verification period is provided in Section 3.0.

2.2. ELECTRICAL AND THERMAL PERFORMANCE AND EFFICIENCY

The heat and power production performance evaluation included electrical power output, heat recovery, and CHP efficiency determinations during controlled test periods. Following the test runs, analysts reviewed the data and determined that all test runs were valid by meeting the following criteria:

- at least 90 percent of the one-minute average power meter data were logged
- data and log forms that show SUT operations conformed to the permissible variations throughout the run (refer to Table 2-1)
- ambient temperature and pressure readings were recorded at the beginning and end of the run
- field data log forms were completed and signed
- records demonstrate that all equipment met the allowable QA/QC criteria

Based on ASME PTC-17, the GVP-specified guidelines state that efficiency determinations were to be performed within 60 minute test periods in which maximum variability in key operational parameters did not exceed specified levels. Table 2-1 summarizes the maximum permissible variations observed in power output, ambient temperature, and ambient pressure for each test run. The table shows that the PTC-17 requirements for these parameters were met for all test runs.

Table 2-1. Variability in Operating Conditions During Controlled Test Periods

		Maximum Observed Variation in Measured Parameters				
		Power Output[a]	**Ambient Temp. (°F)**	**Ambient Pressure[a]**	**Gas Pressure[a]**	**Gas Temperature (°F)**
Maximum Allowable Variation		**± 5 %**	**± 5 °F**	**± 1 %**	**± 2 %**	**± 5 °F**
200kW	Run 1	0.6	1.7	0.04	0.06	2.0
	Run 2	1.0	2.4	0.03	0.04	1.6
	Run 3	0.6	1.8	0.04	0.04	1.6
150 kW	Run 1	0.3	0.6	0.02	0.04	0.5
	Run 2	0.3	0.4	0.03	0.05	0.8
	Run 3	0.3	0.9	0.01	0.04	0.3
100 kW	Run 1	0.6	1.1	0.02	0.04	0.2
	Run 2	0.6	1.5	0.01	0.05	0.9
	Run 3	0.7	4.9	0.03	0.03	2.0

[a] Maximum (Average of Test Run – Observed Value) / Average of Test Run * 100

2.2.1. Electrical Power Output, Heat Production, and Efficiency during Controlled Tests

Table 2-2 summarizes the ambient conditions during the controlled load tests. Table 2-3 summarizes the power output, heat production, and efficiency performance of the SUT. The heat recovery and heat input determinations corresponding to the test results are summarized in Tables 2-4 and 2-5. A total of three fuel samples were collected for compositional analysis and calculation of LHV for heat input determinations. There was very little variability in any of the measurements associated with the efficiency determinations.

Table 2-2. Patterson Farms DG/CHP System Ambient Conditions during Controlled Tests

Test ID		Temp (^oF)	Pbar (psia)
200 kW	Run 1	60.5	14.5
	Run 2	62.4	14.5
	Run 3	63.7	14.5
	Avg.	**62.2**	**14.5**
150 kW	Run 1	65.7	14.5
	Run 2	65.6	14.5
	Run 3	66.8	14.5
	Avg.	**66.0**	**14.5**
100 kW	Run 1	66.7	14.5
	Run 2	64.6	14.5
	Run 3	61.1	14.5
	Avg.	**64.2**	**14.5**

The average net electrical power delivered to the facility was 191 kW during 100% load tests, 153 kW during 75% load tests, and 104 kW during 50% load tests. The average electrical efficiency at 100% load was 26.7 percent. At 75% load, average electrical efficiency was 21.8 percent. At 50% load, average electrical efficiency was 15.0 percent.

Heat recovery and use during the controlled test periods averaged 0.199 MBtu/h at 200 kW, 0.125 MBtu/h at 150 kW, and 0.00502 MBtu/h at 100 kW. Due to low thermal demand in the digester, the majority of heat generated by the CHP system was dissipated through the radiator loop. Thermal efficiency for the digester loop at this site averaged 8.14 percent at 200 kW, 5.20 percent at 150 kW, and 2.13 percent at 100 kW. Thermal efficiency is expected to be higher during colder months and as heat use by the farm is expanded.

Table 2-3. Patterson Farms DG/CHP System Electrical and Thermal Performance

Test ID		Heat Input (MBtu/h)	Electrical Power Generation Performance		Digester Loop Heat Recovery Performance		CHP Efficiency (%)	Radiator Loop Heat Rejected (MBtu/h)
			Power Generated (kW)	Electrical Efficiency (%)	Heat Recovered (MBtu/h)	Thermal Efficiency (%)		
200 kW	Run 1	2.45	192	26.8	0.164	6.72	33.5	1.60
	Run 2	2.44	191	26.6	0.215	8.77	35.4	1.34
	Run 3	2.44	190	26.6	0.218	8.94	35.5	1.34
	Avg.	**2.45**	**191**	**26.7**	**0.199**	**8.14**	**34.8**	**1.42**
150 kW	Run 1	2.39	153	21.8	0.0907	3.79	25.6	2.21
	Run 2	2.40	153	21.8	0.142	5.93	27.7	1.60
	Run 3	2.39	153	21.9	0.141	5.89	27.8	1.59
	Avg.	**2.39**	**153**	**21.8**	**0.125**	**5.20**	**27.0**	**1.80**
100 kW	Run 1	2.36	104	15.0	0.114	4.84	19.9	1.73
	Run 2	2.36	104	15.0	0.0237	1.00	16.0	6.15
	Run 3	2.37	104	15.0	0.0131	0.553	15.5	7.63
	Avg.	**2.36**	**104**	**15.0**	**0.0502**	**2.13**	**17.1**	**5.17**

Runs 2 and 3 at 50 % load (100 kW) showed substantially lower heat recovered and thermal efficiency for the digester loop than that measured during run 1. Examining the data showed that water flow in the digester loop dropped significantly during runs 2 and 3, as shown in Table 2-4. A flow control valve automatically regulates the temperature of the digester and can shut down the flow of hot water to the digester. During Runs 2 and 3, heat stopped going to the digester and was instead dumped to the radiator, as shown by the increased radiator loop heat rejected in Table 2-3. Run 1 is more representative of normal heat recovery performance for the digester at 100 kW.

Table 2-4. Patterson Farms DG/CHP System Heat Recovery Conditions

Test ID		Heat Recovery to Digester			
		Fluid Flow Rate (gph)	Supply Temp. (^oF)	Return Temp. (^oF)	Heat Recovery Rate (MBtu/h)
200 kW	Run 1	2203	116	107	0.164
	Run 2	3109	115	107	0.215
	Run 3	3249	115	107	0.218
	Avg.	**2854**	**115**	**107**	**0.199**
150 kW	Run 1	1291	114	105	0.0907
	Run 2	2227	114	106	0.142
	Run 3	2253	113	106	0.141
	Avg.	**1924**	**114**	**106**	**0.125**
100 kW	Run 1	1715	114	106	0.114
	Run 2	361	115	107	0.0237
	Run 3	164	117	107	0.0131
	Avg.	**747**	**115**	**107**	**0.0502**

Table 2-5. Patterson Farms DG/CHP System Heat Input Determinations

Test ID		Fuel Input				
		Heat Input (MBtu/h)	Gas Flow Rate (scfh)	LHV (Btu/scf)	Gas Pressure (psia)	Gas Temp. (^{o}F)
200 kW	Run 1	2.45	4635		15.3	84.1
	Run 2	2.44	4623		15.3	86.7
	Run 3	2.44	4620		15.3	88.6
	Avg.	**2.45**	**4626**	**528.68**	**15.3**	**86.5**
150 kW	Run 1	2.39	4524		15.4	90.3
	Run 2	2.40	4531		15.4	91.2
	Run 3	2.39	4527		15.4	91.6
	Avg.	**2.39**	**4527**	**528.68**	**15.4**	**91.0**
100 kW	Run 1	2.36	4455		15.5	91.2
	Run 2	2.36	4462		15.5	90.7
	Run 3	2.37	4477		15.5	88.8
	Avg.	**2.36**	**4465**	**528.68**	**15.5**	**90.2**

[a] Reported LHV is the average of three fuel gas samples collected on May 1, 2007

2.2.2. Electrical Energy Production and Efficiency during the Extended Test Period

Power production on each of the 7 days monitored was fairly consistent. Figure 2-1 presents a time series plot of 1-hour average generator output in kilowatt-hours (kWh) for the monitored week (May 20, 2007 – May 26, 2007). Over the entire 7-day period, 32,239 kWh of net power was produced at the site for a daily average of 4,606 kWh. During the 7-day period the system operated for a total of approximately 167 hours, or approximately 99 percent of the time.

Figure 2-2 shows the electrical, thermal, and total CHP efficiencies for the 7-day monitoring period. CHP efficiency was higher than that verified during the control test periods, with net electrical efficiency averaging 28 percent and thermal efficiency for the digester loop averaging 18 percent, leading to an average total efficiency of 46 percent (versus 35 percent recorded during the fixed load tests). The efficiency increase is likely due to increased heat demand during the long term monitoring.

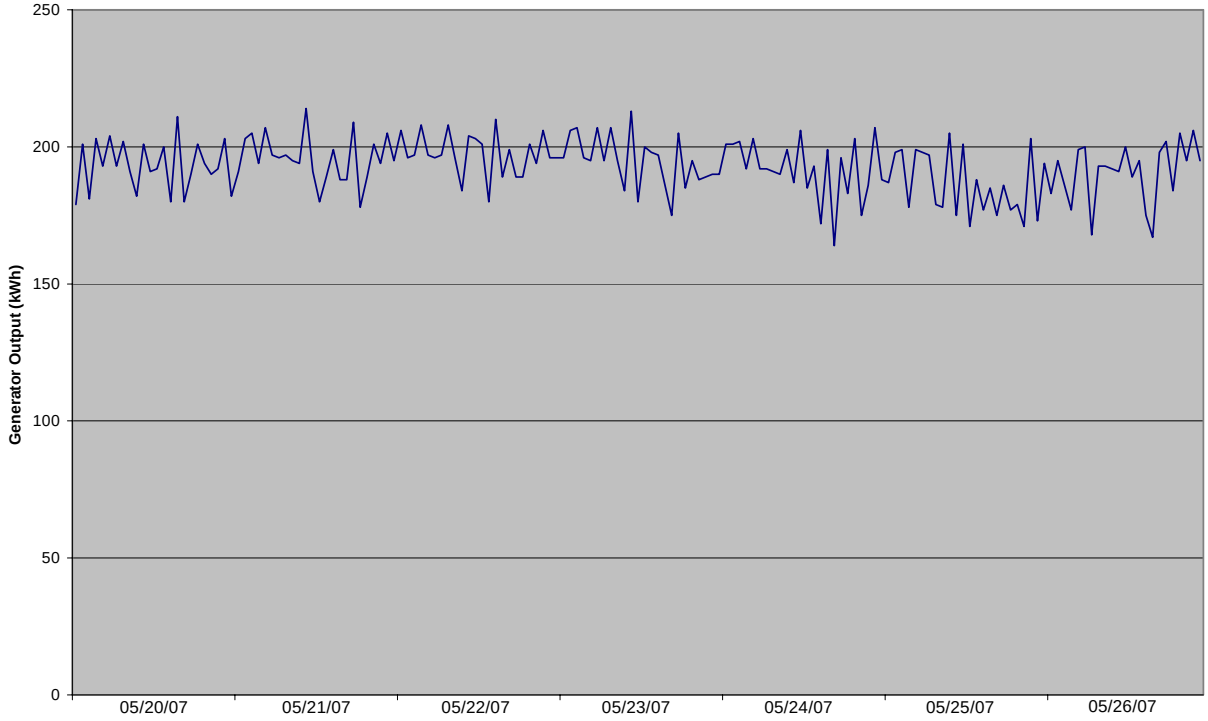

Figure 2-1. Patterson Farms Generator Output over Long-Term Monitoring

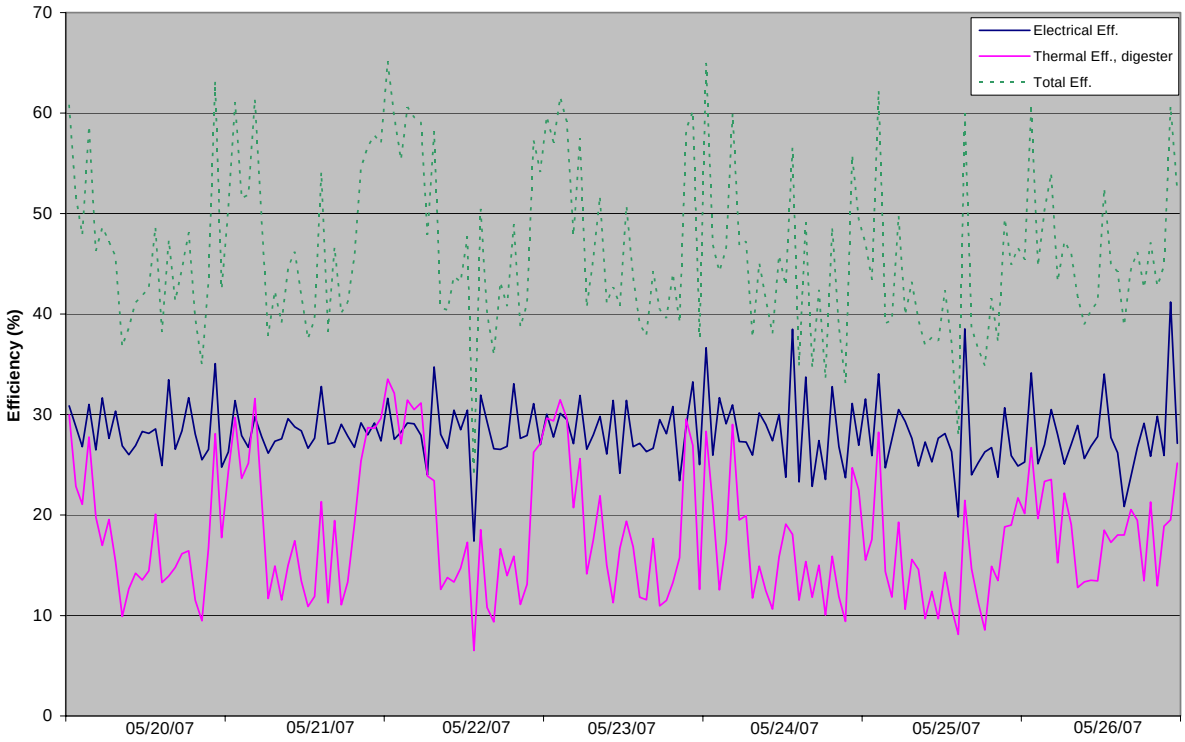

Figure 2-2. Patterson Farms Efficiencies over Long-Term Monitoring

2.3. POWER QUALITY PERFORMANCE

Power quality parameters measured during the verification included: frequency, power factor, and voltage and current THD. Table 2-6 summarizes the power quality parameters recorded during the 100% load controlled testing. The data show that the unit had little or no impact on grid voltage, frequency, or voltage THD.

Table 2-6. Summary of Patterson Farms DG/CHP System Power Quality

Parameter	Average	Maximum Recorded	Minimum Recorded	Standard Deviation
Frequency (Hz)	60.0	60.03	59.6	0.02
Voltage THD (%)	3.14	3.24	3.04	0.04
Current THD (%)	5.90	6.37	5.35	0.25
Power Factor (%)	99.7	99.8	99.7	0.01

2.4. EMISSIONS PERFORMANCE

2.4.1. Patterson Farms Exhaust Emissions

Stack emission measurements were conducted during each of the controlled test periods in accordance with the EPA reference methods listed in the GVP. Following the GVP, the SUT was maintained in a stable mode of operation during each test run based on PTC-17 variability criteria. Results are summarized in Table 2-7.

Table 2-7. Patterson Farms DG/CHP System Emissions during Controlled Tests

Test ID		Power (kW)	CO Emissions			CO_2 Emissions		
			ppm	lb/h	lb/kWh	ppm	lb/h	lb/kWh
200 kW	Run 1	192	182	0.389	0.00202	127000	271	1.41
	Run 2	191	354	0.755	0.00396	128000	274	1.44
	Run 3	190	337	0.718	0.00378	129000	276	1.45
	Avg.	**191**	**291**	**0.621**	**0.00325**	**128000**	**274**	**1.44**
150 kW	Run 1	153	21600	40.1	0.262	129000	240	1.57
	Run 2	153	22300	41.5	0.272	131000	243	1.59
	Run 3	153	22400	41.7	0.272	131000	243	1.59
	Avg.	**153**	**22100**	**41.1**	**0.269**	**130000**	**242**	**1.58**
100 kW	Run 1	104	29700	52.5	0.506	123000	217	2.09
	Run 2	104	29900	52.9	0.509	124000	219	2.11
	Run 3	104	30300	53.5	0.516	124000	220	2.12
	Avg.	**104**	**30000**	**53.0**	**0.510**	**123000**	**218**	**2.10**

Table 2-7 continued. Patterson Farms DG/CHP System Emissions during Controlled Tests

Test ID		Power (kW)	THC Emissions			NOx Emissions		
			ppm	lb/h	lb/kWh	ppm	lb/h	lb/kWh
200 kW	Run 1	192	1840	3.92	0.0204	1870	3.99	0.0208
	Run 2	191	1810	3.86	0.0203	1890	4.04	0.0212
	Run 3	190	1790	3.81	0.0200	1950	4.17	0.0219
	Avg.	**191**	**1810**	**3.87**	**0.0202**	**1910**	**4.07**	**0.0213**
150 kW	Run 1	153	2950	5.49	0.0359	409	0.760	0.00497
	Run 2	153	2920	5.44	0.0355	430	0.800	0.00523
	Run 3	153	2960	5.50	0.0359	447	0.832	0.00543
	Avg.	**153**	**2950**	**5.48**	**0.0359**	**429**	**0.797**	**0.00521**
100 kW	Run 1	104	3220	5.70	0.0549	71.9	0.127	0.00123
	Run 2	104	3170	5.61	0.0540	73.3	0.130	0.00125
	Run 3	104	3100	5.48	0.0529	70.8	0.125	0.00121
	Avg.	**104**	**3160**	**5.59**	**0.0539**	**72.0**	**0.127**	**0.00123**

Emissions results are reported in units of parts per million volume for CO, CO_2, THC, and NO_X. Measured pollutant concentration data were converted to mass emission rates using EPA Method 19 and are reported in units of pounds per hour (lb/h). The emission rates are also reported in units of pounds per kilowatt hour electrical output (lb/kWh). They were computed by dividing the mass emission rate by the electrical power generated during each test run.

The average CO emission rate normalized to power output was 0.00325 lb/kWh for the 100% load tests, 0.269 lb/kWh at the 75% load tests, and 0.510 lb/kWh for the 50% load tests. CO_2 emission rates averaged 1.44 lb/kWh at 100% load, 1.58 lb/kWh at 75% load, and 2.10 lb/kWh at 50% load. THC emissions averaged 0.0202 lb/kWh at 100% load, 0.0359 lb/kWh at 75% load, and 0.0539 lb/kWh at 50% load. NO_x emissions averaged 0.0213 lb/kWh at 100% load, 0.00521 lb/kWh at 75% load, and 0.00123 lb/kWh at 50% load. The large increases and decreases in CO and NOx emissions during the reduced load testing are indicative of incomplete combustion when the engine is not operating at full load.

2.4.2. Estimation of Annual NO_X and CO_2 Emission Reductions

Section 1.4.6 outlined the approach for estimating the annual emission reductions that may result from use of the DG/CHP system at this facility. The Patterson Farms emissions were compared to both the New York State and national power system average emissions as published in EGRID [5] and includes the estimated CO_2 equivalent emissions that are eliminated by the use of waste generated methane as fuel. . The detailed approach is provided in the TQAP.

The first step in determining estimated annual emissions reductions is to estimate annual NO_X and CO_2 emissions from the SUT based on data generated during this verification. The average NO_X and CO_2 emission rates at full power during the verification were 21.3 and 1,430 lb/MWh, respectively. The power delivered by the SUT during the verification period averaged 4.61 MWh per day. Assuming a system availability of 95 percent, there is an estimated annual generating rate of approximately 1,600 MWh/yr.

Table 2-8 summarizes the estimated annual CHP system NOx and CO_2 emissions reductions. A positive value indicates an emissions reduction; a negative value indicates an emissions increase. Estimated annual NO_X emissions increased, a trend that has been seen at other DG/CHP verifications where significant heat offsets are not realized. CO_2 emissions from operation of the SUT are also higher than the grid estimates for this site. However, significant GHG reductions are estimated when accounting for the amount of CO2 equivalent emissions are eliminated through use of biogas CH_4 as fuel.

Table 2-8. Estimation of Patterson Farms Emission Reductions

Regional Power System Scenarios	Annual SUT Emissions[a], lb/MWh		Grid Emissions[b], lb/MWh		Estimated Annual CO_2 Emissions Reductions from Capture and use of Biogas, lb/y	Estimated Annual Emissions Reductions, lb/y	
	NOx	CO_2	NOx	CO_2		NOx	CO_2
New York State	21.3	1430	1.46	980	14,340,000	-31700	13,613,000
Nationwide			2.96	1390		-29300	14,272,000

[a] Based on the SUT's emissions performance during the full load testing, an expected availability of 95 percent, and the average measured power output during the extended monitoring period.
[b] From EGRID

(this page intentionally left blank)

3.0 DATA QUALITY ASSESSMENT

3.1. DATA QUALITY OBJECTIVES

Under the ETV program, the GHG Center specifies DQOs for each verification parameter before testing commences as a statement of data quality. The DQOs for this verification were developed based on past DG/CHP verifications conducted by the GHG Center, input from EPA's ETV QA reviewers, and input from both the GHG Centers' executive stakeholders groups and industry advisory committees. As such, test results meeting the DQOs will provide an acceptable level of data quality for technology users and decision makers. The DQOs for electrical and CHP performance are quantitative, as determined using a series of measurement quality objectives (MQOs) for each of the measurements that contribute to the parameter determination:

Verification Parameter	DQO (relative uncertainty)
Electrical Performance	±2.0 %
Electrical Efficiency	±2.5 %
CHP Thermal Efficiency	±3.5 %

Each test measurement that contributes to the determination of a verification parameter has stated MQOs, which, if met, demonstrate achievement of that parameter's DQO. This verification is based on the GVP which contains MQOs including instrument calibrations, QA/QC specifications, and QC checks for each measurement used to support the verification parameters being evaluated. Details regarding the measurement MQOs are provided in the following sections of the GVP:

§ 8.1 Electrical Performance Data Validation
§ 8.2 Electrical Efficiency Data Validation
§ 8.3 CHP Performance Data Validation

The DQO for emissions is qualitative in that the verification will produce emission rate data that satisfies the QC requirements contained in the EPA Reference Methods specified for each pollutant. Details regarding the measurement MQOs for emissions are provided in the following section of the GVP:

§ 8.4 Emissions Data Validation

Completeness goals for this verification were to obtain valid data for 90 percent of the test periods (controlled test period and extended monitoring). These goals were met as all of the planned controlled tests were conducted and validated, and 99 percent of valid one-hour average electrical performance data were collected during the 7-day monitoring period.

The following sections document the MQOs for this verification, followed by a reconciliation of the DQOs stated above based on the MQO findings.

3.2. DOCUMENTATION OF MEASUREMENT QUALITY OBJECTIVES

3.2.1. Electrical Generation Performance

Table 3-1 summarizes the MQOs for electrical generation performance.

Table 3-1. Electrical Generation Performance MQOs

Measurement	QA/QC Check	When Performed	Allowable Result	Result Achieved
kW, kVA, kVAR, PF, I, V, f(Hz), THD	Power meter National Institute of Standards and Technology (NIST) traceable calibration	18-month period	± 2.0%	Meets spec.
	CT documentation	At purchase	ANSI Metering Class 0.3%; ± 1.0% to 360 Hz (6th harmonic)	Meets spec.
V, I	Sensor function checks	Beginning of load tests	V: ± 2.01% I: ± 3.01%	Meets spec.
	Power meter crosschecks	Before field testing	± 0.1% differential between meters	Meets spec.
Ambient temperature	NIST-traceable calibration	18-month period	± 1 °F	Meets spec.
	Ice and hot water bath crosschecks	Before and after field testing	Ice water: ± 0.6 °F Hot water: ± 1.2 °F	Meets spec.
Barometric pressure	NIST-traceable calibration	18-month period	± 0.1 "Hg or ± 0.05 psia	Meets spec.

All of the MQOs met the performance criteria. Following the GVP, the MQO criteria demonstrate that the DQO of ±2% relative uncertainty for electrical performance was met.

3.2.2. Electrical Efficiency Performance

Table 3-2 summarizes the MQOs for electrical efficiency performance.

Table 3-2. Electrical Efficiency MQOs

Measurement	QA/QC Check	When Performed	Allowable Result	Result Achieved
Gas meter	NIST-traceable calibration	18-month period	± 1.0% of reading	Did not meet spec.
	Differential pressure check	Prior to testing	< 0.1”	Meets spec.
Gas pressure	NIST-traceable calibration	18-month period	± 0.5% of FS	Meets spec.
	Crosscheck with ambient pressure sensor	Before and after field testing	± 0.08 psia differential between sensors	Meets spec.
Gas temperature	NIST-traceable calibration	18-month period	± 1.0% of FS	Meets spec.
	Ice and hot water bath crosschecks	Before and after field testing	Ice water: ± 0.6 ^{o}F Hot water: ± 1.2 ^{o}F	Meets spec.
Fuel Gas LHV	NIST-traceable standard gas calibration	Weekly	± 1.0 % of reading	Meets spec.
	ASTM D1945 duplicate sample analysis and repeatability	Each sample	Within D1945 repeatability limits for each gas component	Meets spec.

The MQOs for the gas meter was not met. A NIST-traceable calibration for the Roots meter was not available. However, Roots meter calibrations are permanent so it is assumed that the meter was in spec. Following the GVP, the MQO criteria in Tables 3-1 and 3-2 demonstrate that the DQO of ±2.5 % relative uncertainty for electrical efficiency was met.

3.2.3. CHP Thermal Efficiency Performance

Table 3-3 summarizes the MQOs for CHP thermal efficiency performance.

Table 3-3. CHP Thermal Efficiency MQOs

Description	QA/QC Check	When Performed	Allowable Result	Result Achieved
Heat transfer fluid flow meter	NIST-traceable calibration	18-month period	± 1.0% of reading	Meets spec.
	Sensor function checks	At installation	See Appendix B8	Meets spec.
T_{supply} and T_{return} sensors	NIST-traceable calibration	18-month period	± 0.6 ^{o}F between 100 and 210 ^{o}F	Meets spec.
	Ice and hot water bath crosschecks	Before and after field testing	Ice water: ± 0.6 ^{o}F Hot water: ± 1.2 ^{o}F	Meets spec.

All of the MQOs met the performance criteria. Following the GVP, the MQO criteria in Tables 3-1, 3-2, and 3-3 demonstrate that the DQO of ±3.5 % relative uncertainty for CHP thermal efficiency was met.

3.2.4. Emissions Measurement MQOs

Sampling system QA/QC checks were conducted in accordance with GVP and TQAP specifications to ensure the collection of adequate and accurate emissions data. The reference methods specify detailed sampling methods, apparatus, calibrations, and data quality checks. The procedures ensure the

quantification of run-specific instrument and sampling errors and that runs are repeated if the specific performance goals are not met. Table 3-4 summarizes relevant QA/QC procedures.

Table 3-4. Summary of Emissions Testing Calibrations and QA/QC Checks

Description	QA/QC Check	When Performed	Allowable Result	Result Achieved
CO, CO_2, O_2	System zero drift test	After each test run	± 2% of analyzer span	All calibrations, system bias checks, and drift tests were within the allowable criteria.
	System span drift test	After each test run	± 4% of analyzer span	
NO_x	System zero drift test	After each test run	± 2% of analyzer span	All criteria were met for the NO_X measurement system.
	System span drift test	After each test run	± 4% of analyzer span	
THC	System zero drift test	After each test run	± 2% of analyzer span	All criteria were met for the THC measurement system.
	System span drift test	After each test run	± 4% of analyzer span	
Ambient temperature	Temperature within allowable range	After each test run	Within ± 10°F	Within the allowable criteria
Barometric pressure	Barometric pressure within allowable range	After each test run	Within ± 1" Hg	Within the allowable criteria

Satisfaction and documentation of each of the calibrations and QC checks verified the accuracy and integrity of the measurements and that reference method criteria were met for each of the parameters.

3.3. AUDITS

This verification was supported by ADQ conducted by the GHG Center QA manager. During the ADQ, the QA manager systematically checked each data stream leading from raw data to final results. The ADQ confirmed that no systematic errors were introduced during data handling and processing.

(this page intentionally left blank)

4.0 REFERENCES

[1] Southern Research Institute, *Test and Quality Assurance Plan – Electric Power and Heat Production Using Renewable Biogas at Patterson Farms,* SRI/USEPA-GHG-QAP-43, www.sri-rtp.com, Greenhouse Gas Technology Center, Southern Research Institute, Morrisville, NC, January 2007.

[2] Association of State Energy Research and Technology Transfer Institutions, *Distributed Generation and Combined Heat and Power Field Testing Protocol, DG/CHP Version,* www.dgdata.org/pdfs/field_protocol.pdf, ASERTTI, Madison, WI, October 2004.

[3] Southern Research Institute, *Generic Verification Protocol – Distributed Generation and Combined Heat and Power Field Testing Protocol,* SRI/USEPA-GHG-GVP-04, www.sri-rtp.com, Greenhouse Gas Technology Center, Southern Research Institute, Research Triangle Park, NC. July 2005.

[4] *CRC Handbook of Chemistry and Physics*. Robert C. Weast, Ph.D., editor, CRC Press, Inc., Boca Raton, FL. 1980.

[5] U.S. Environmental Protection Agency, *Emissions & Generation Resource Integrated Database (eGRID) Version 2.01*, available from <http://www.epa.gov/cleanrgy/egrid/index.htm>