BCHP System for an A&P Supermarket

NYSERDA BCHP Conference

June 20, 2002

David Tomicki

A&P Supermarkets

Hugh I Henderson, Jr. P.E.

CDH Energy Corp.

Project Team

Host Facility:

- Waldbaums/A&P

Project Sponsors:

- NYSERDA
- KeySpan Gas R&
- Oak Ridge National Laboratory
- National Renewable Energy Laboratory

Others:

- Exergy Partners, AGA, GTI

Overview

- Benefits of this CHP Application
  - desiccant dehumidification provides summer time thermal loads
  - winter-time space heating loads are also significant
  - highly repeatable application, 1000+ supermarkets in NY State
- Installation Desiccant Equipment
  - some details of the store and CHP design
  - monitoring plans
- Initial Performance Predictions

The CHP Concept

Heat recovery makes on-site power generation practical

It's the annual avg thermal loads that matter!

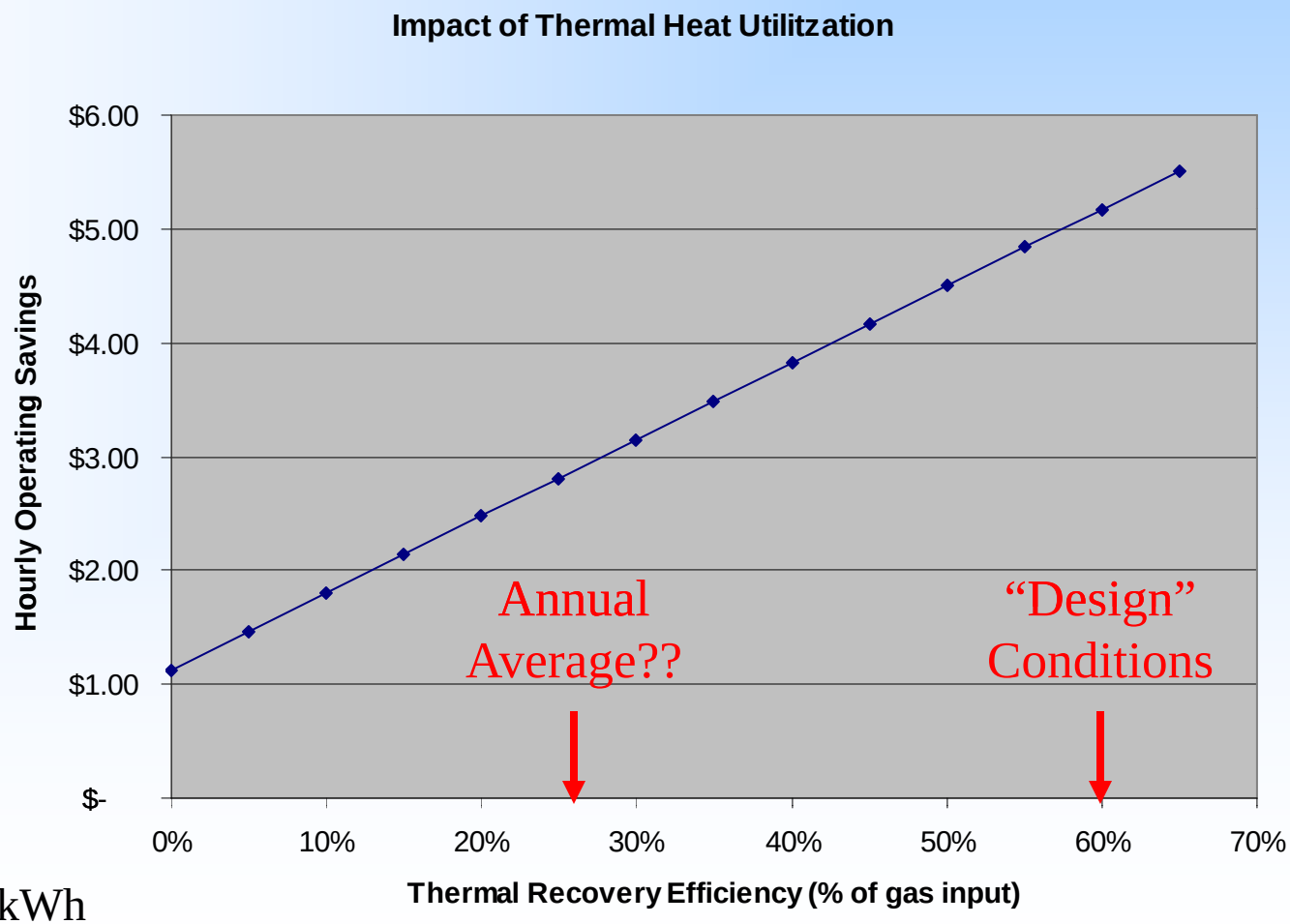

$0.65/therm & $0.10/kWh

CHP in Supermarkets

- Peak demand is 400-600 kW for typical store
- Significant space heating loads due to refrigerated display cases
- Desiccant dehumidification is widely used in supermarkets
  - more than 1,000 desiccant units in US stores
- Good balance between thermal and electrical loads

A&P Supermarket

- "New" Waldbaums supermarket in Hauppauge, NY
- 57,000 sq ft facility opens in July 2002
- One HVAC unit (Munters DryCool) serves main sales area
  - heating, cooling & dehumidification
- electric is LIPA / gas is KeySpan Energy

CHP System

- Capstone 60 kW Microturbine
- Nat. Gas Compressor (scroll)
- Unifin Heat Exchanger
- Hot Water Coils Installed in Munters Unit

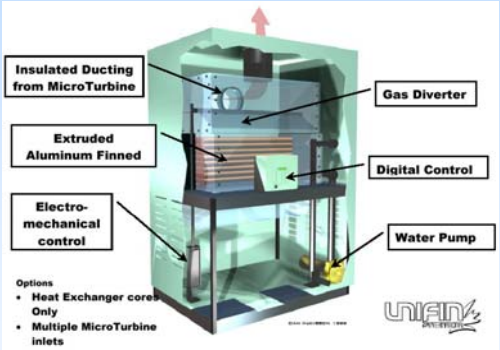

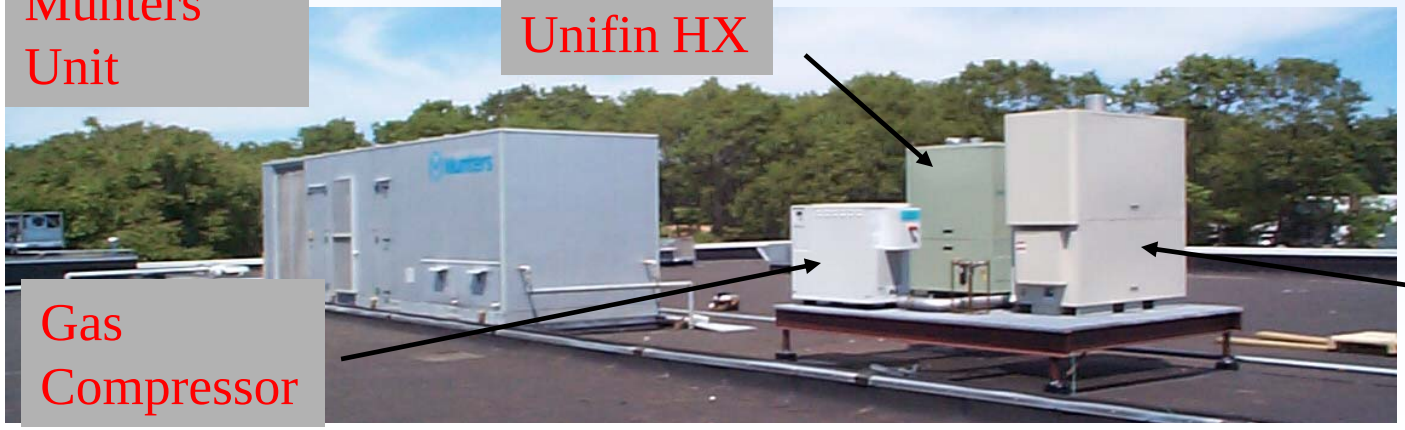

Overall Layout

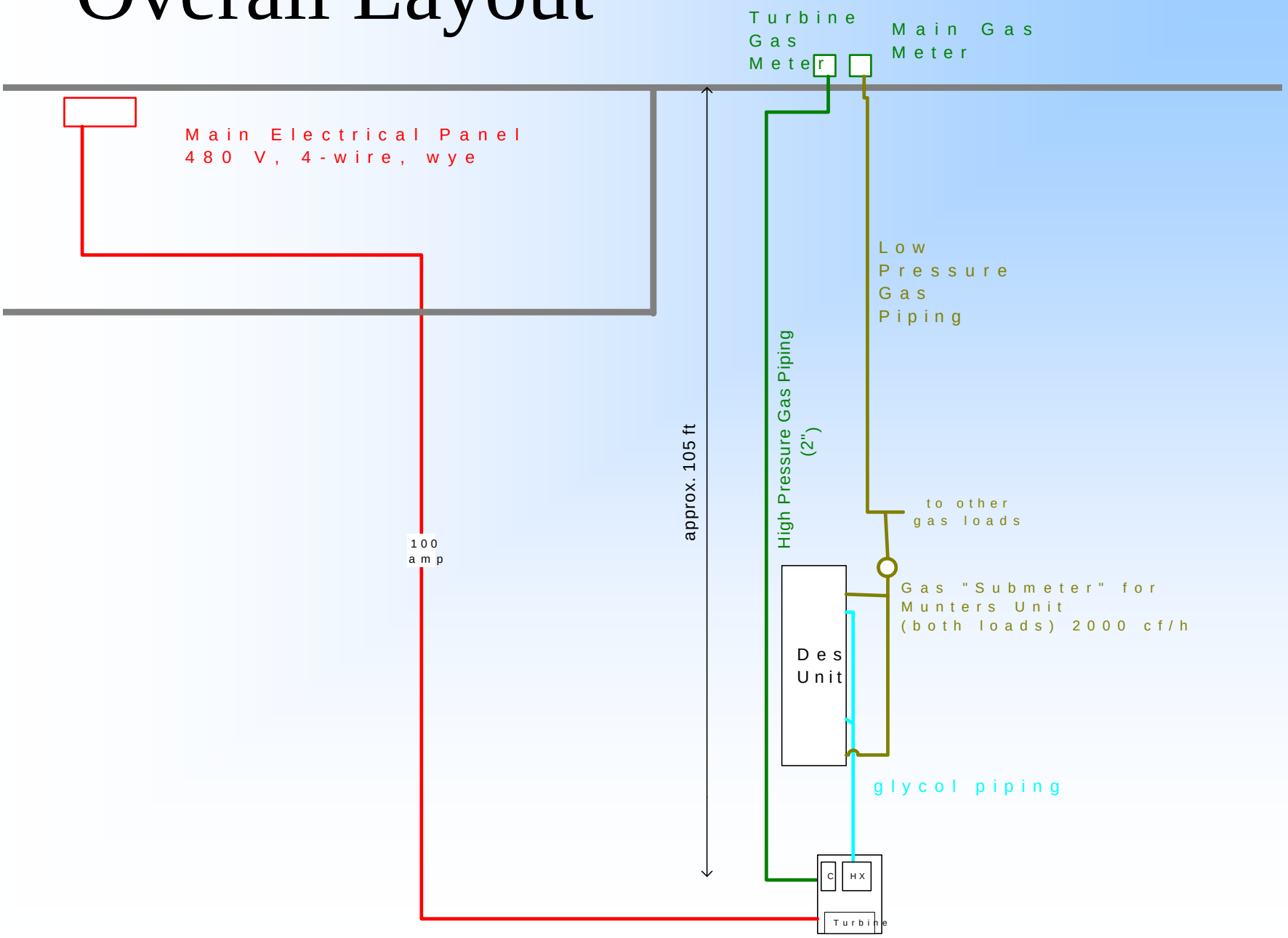

Rooftop-Mounted Skid

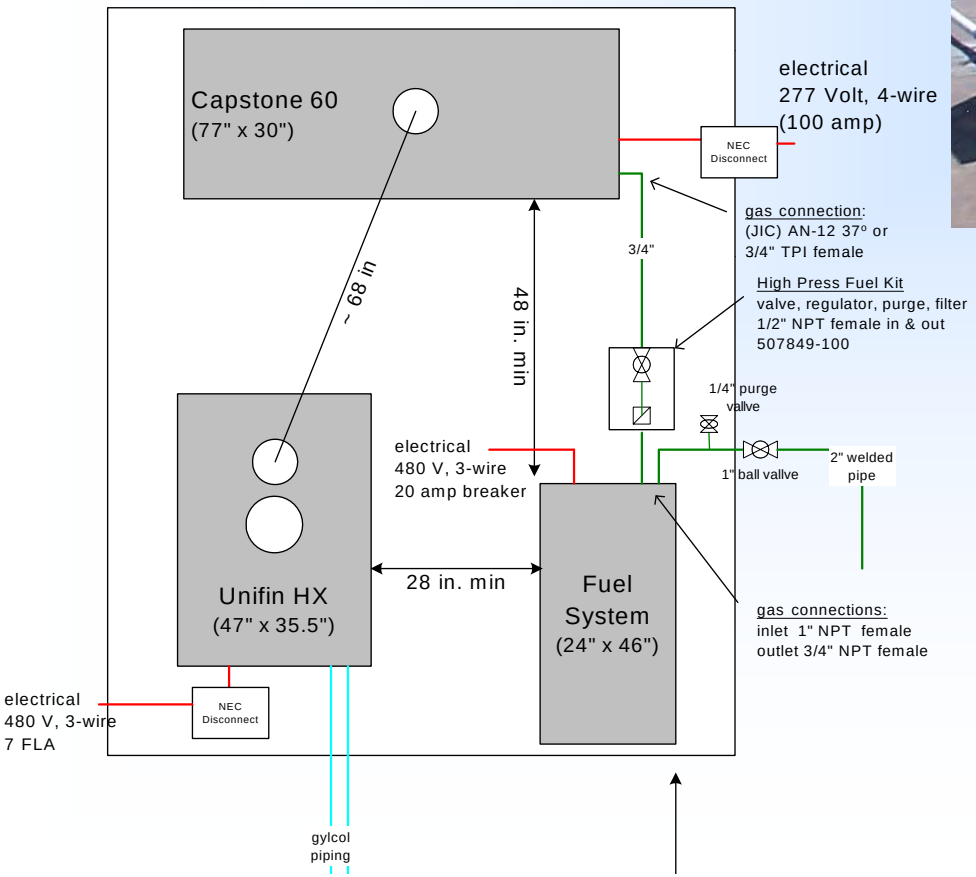

Heat Recovery System

Hot water coils installed in Munters Unit

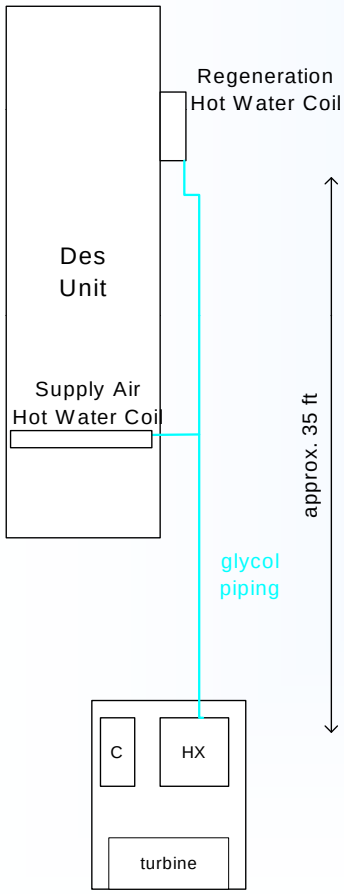

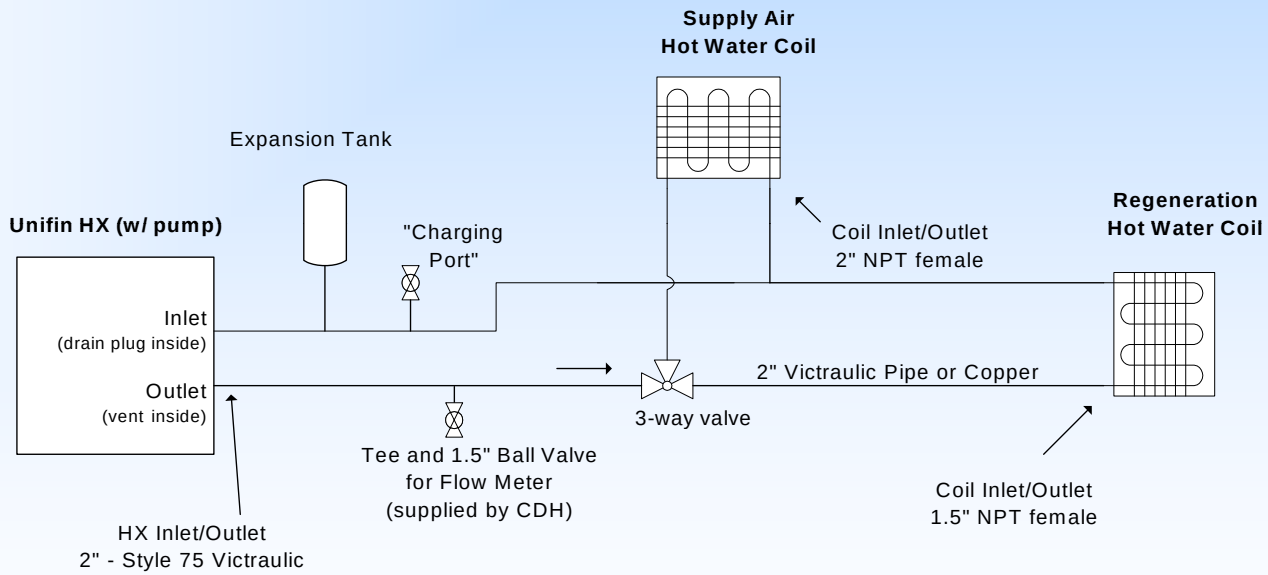

Munters HVAC Unit

Provides Heating, Cooling & Dehumidification

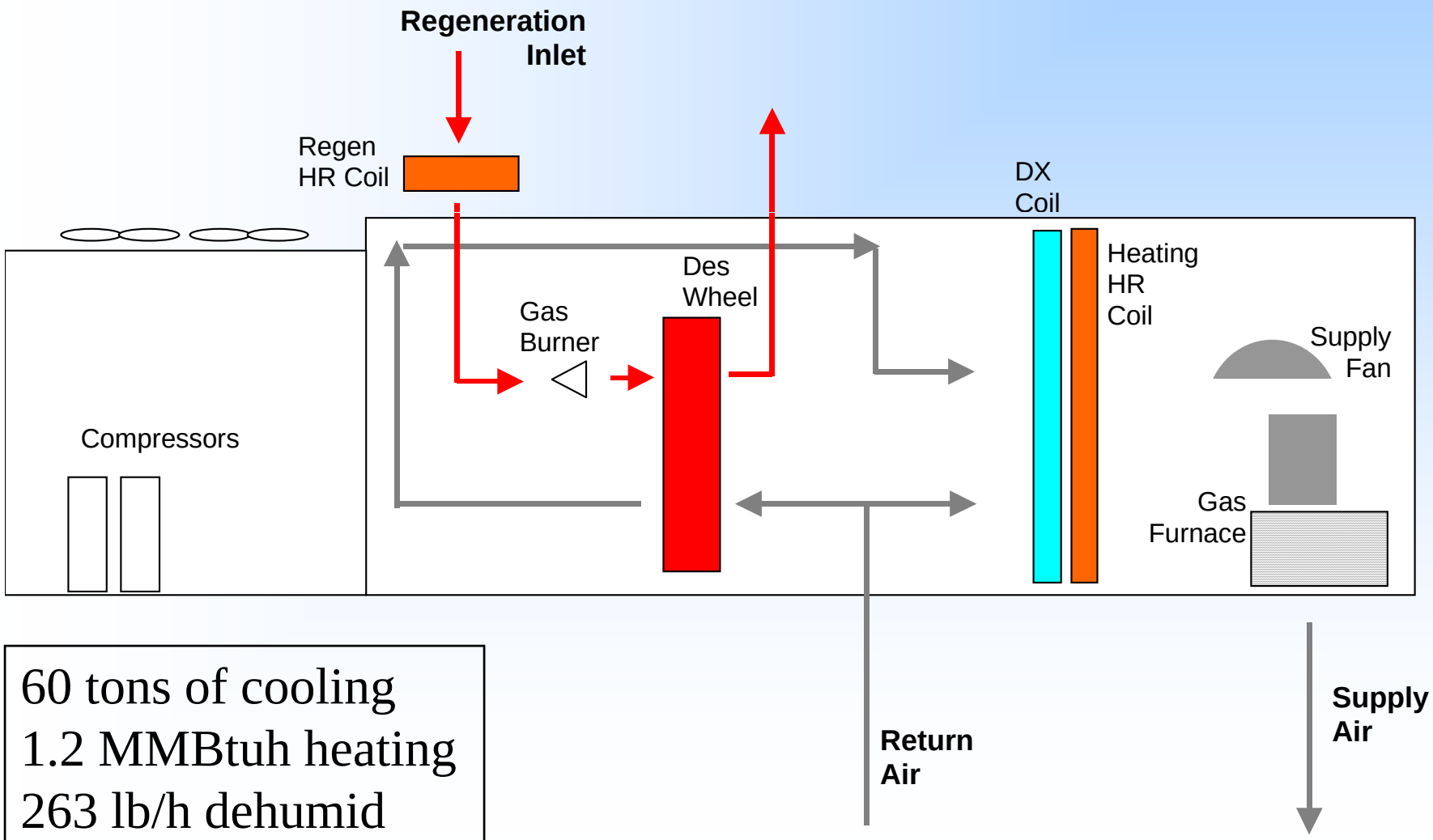

60 tons of cooling
1.2 MMBtuh heating
263 lb/h dehumid

CHP System Summary

- CHP System sized for thermal loads
  - provide 60 kW of baseload power
  - grid-parallel operation only
  - may consider scheduling turbine operation for periods when heat recovery loads are low
- System can use heat recovery when available *or* Munters systems: fully redundant

Predicted Thermal Loads

- Use experiences from other supermarkets to predict thermal loads
  - supermarkets typically have higher heating loads than other commercial applications (balance points of 55-65°F)

    desiccant dehumidification starts with ambient humidity levels above 60 gr/lb
- Detailed HX “effectiveness” models developed and used to assess system performance

Heat Recovery Performance

Space Heating

- heating capacity ~300 MBtu/h
- heats 20,000 cfm from 60 to 75°F
- entering fluid temperature is 120-140°F

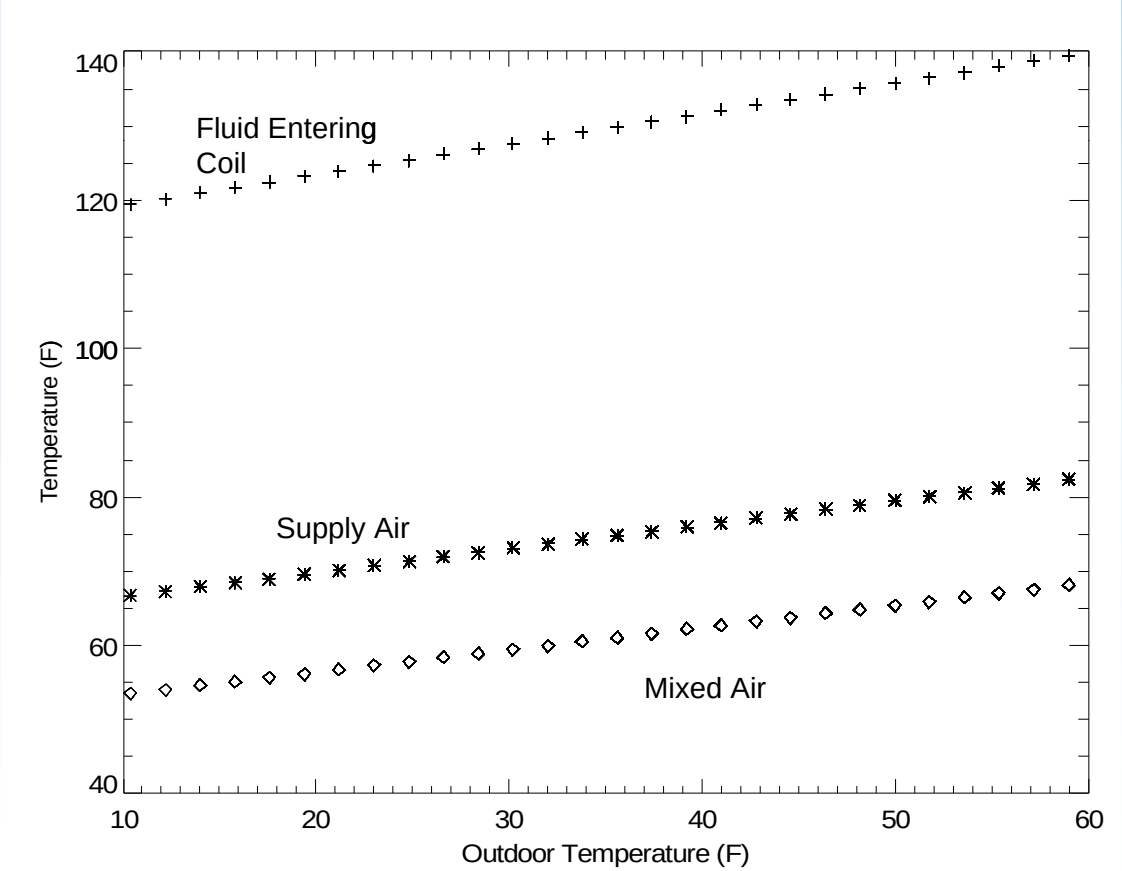

Heat Recovery Performance

Desiccant Regeneration

- preheats air before regen burner
- desiccant wheel needs 250°F
- ~330 MBtu/h
- heats 2,850 cfm from 90 to 170°F
- entering fluid temperature is 220°F

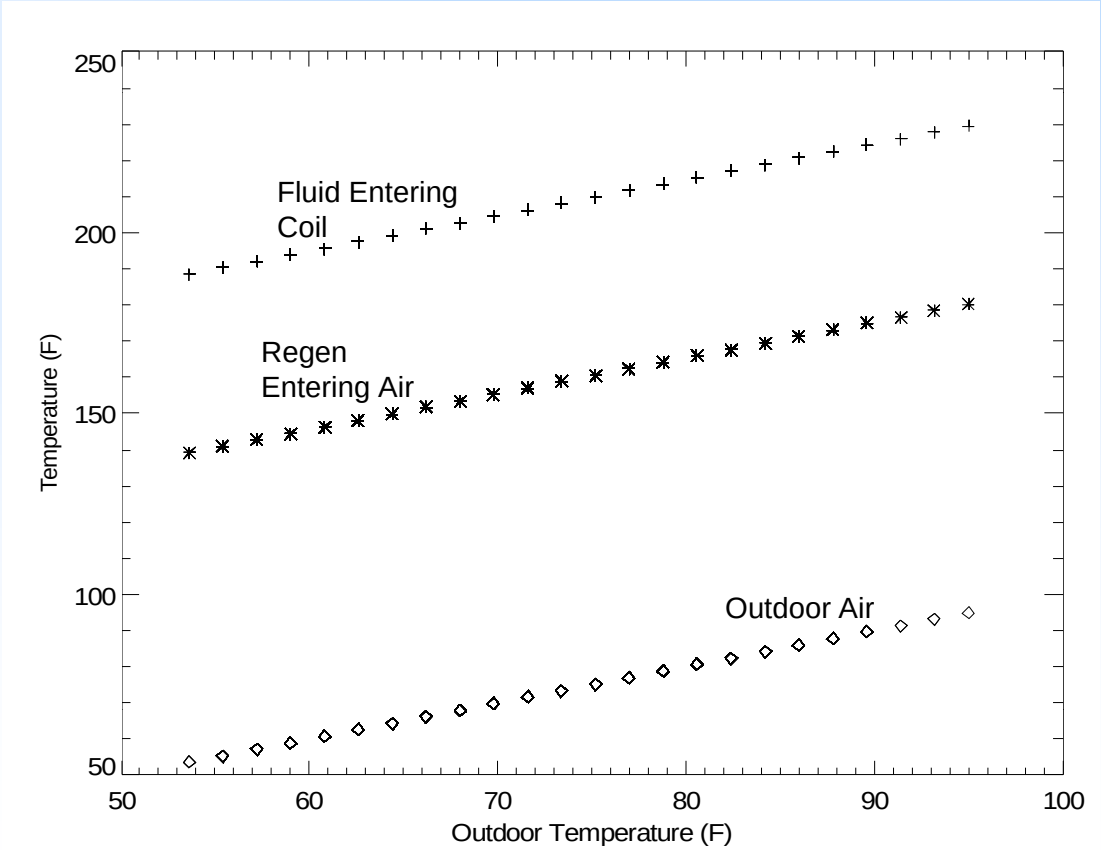

Alternative System Options

Unifin HX Option

- fluid HX approach better matched to space heating and regen loads
- only meets ½ regen load

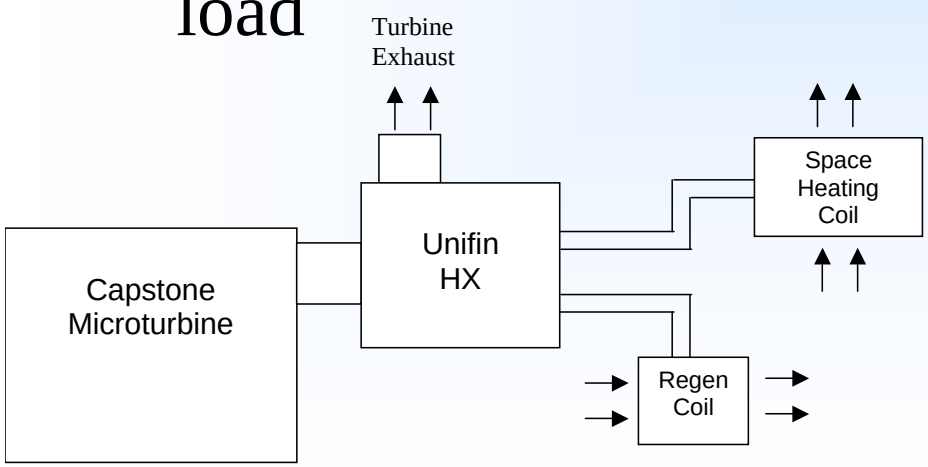

Direct Exhaust

- exhaust from 60 kW microturbine is good match for desiccant regeneration
- 1,100 scfm at 550°F

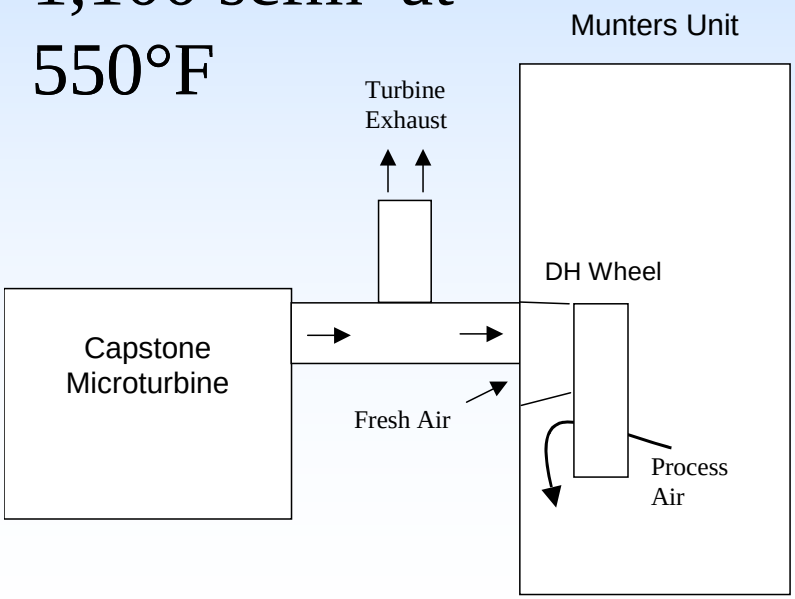

Annual Heat Recovery Impact

- Used typical year weather data for NYC/Laguardia
- Looked at both Unifin and direct exhaust option
- Unifin approach better for space heating (most important in this climate)

Annual Results

	Heating		Dehumidification		Total	
	therms	**Cost**	**therms**	**Cost**	**Therms**	**Cost**
Base Case (no HR)	15,923	$12,738	6,713	$5,370	22,636	$18,108
Unifin HX	2,464	$1,971	3,462	$2,769	5,926	$4,740
Direct Exhaust	5,363	$4,290	-	-	5,363	$4,290

Notes: Gas costs - $0.80/therm

Field Monitoring

- Plan to install data logging equipment to quantify thermal and electric performance
  - electrical turbine output (kW, amps, volts)
  - thermal output of Unifin HX (flow, ΔT)
  - turbine exhaust (T, static P, flow)
  - desiccant/HVAC unit performance (T, RH, kW)

CHP Monitoring Points

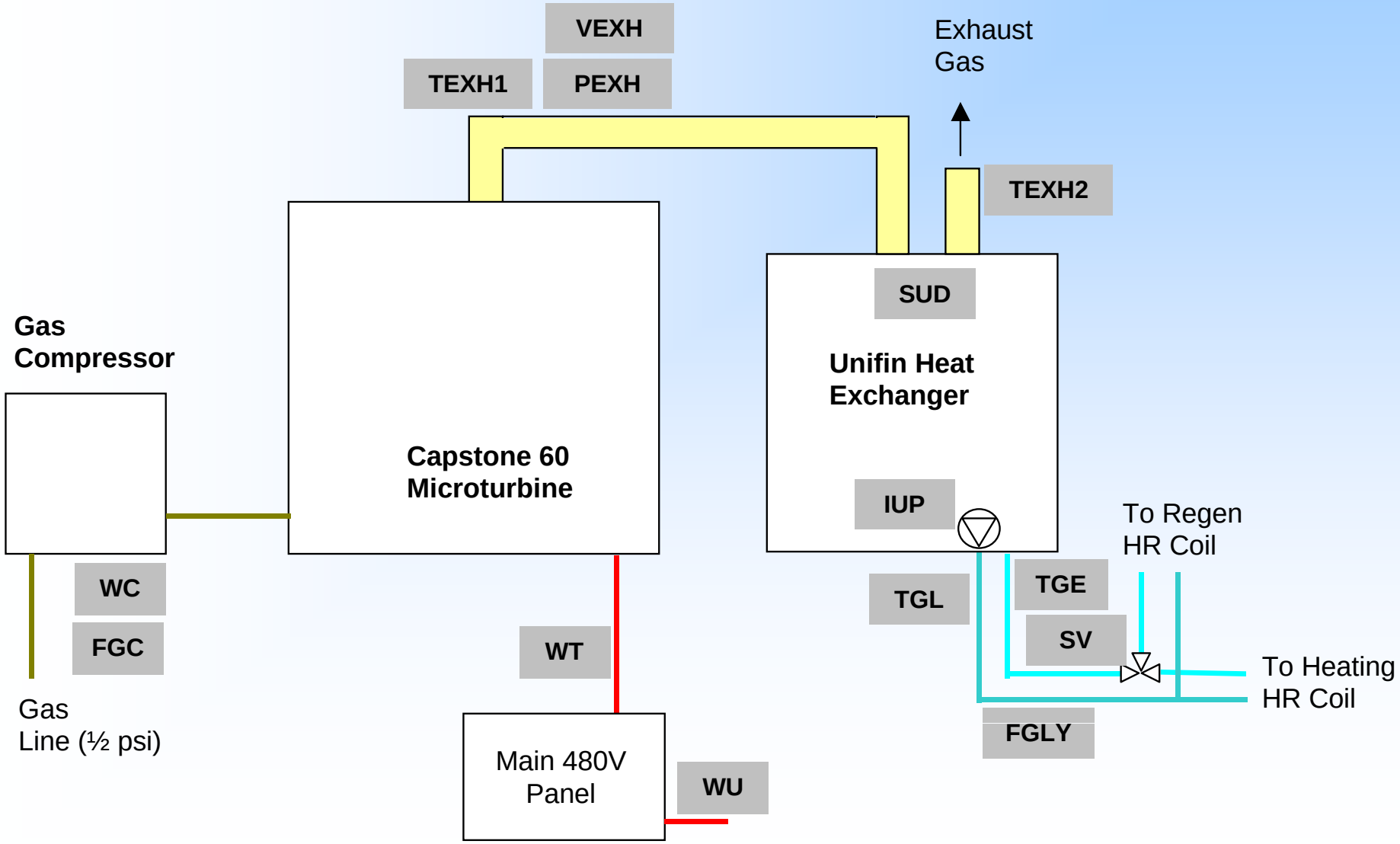

Future Plans

- Finish installation and commission systems in July
- Install and commission instrumentation for detailed field monitoring by August
- Measure system performance for 1 year
- Determine most cost effective operating mode for microturbine